AVENGER 220 CRUISE | AVENGER 220 STREET BS IV

Bajaj Auto Limited
Akurdi Pune 411 035 India
Tel +91 20 **27472851**
Fax +91 20 **27407385**
www.bajajauto.com

CIN L65993PN2007PLC130076

BAJAJ MOTORCYCLES

AVENGER 220 CRUISE | AVENGER 220 STREET BS IV

Spare Parts Catalogue

Notice

All information contained in this manual is based on the latest product information at the time of publication. Bajaj Auto Limited accepts no liability for any inaccuracies or omissions in this publication, although every possible care has been taken to make it as complete and accurate as possible. All procedures and specifications subject to change without prior notice. The right is reserved to make such changes at any time without prior notice and without incurring an obligation to make such changes to product manufactured previously. Contact your authorized Bajaj Dealer for the latest information on product improvements incorporated after this manual was issued.

DOC. NO.: XXXXXXXX **REV. 00, NOV 16**

Copy rights : All rights reserved. No part of this publicatin may be reproduced, stored in a retrival system, Or transmitted in any form or by any means, electromic mechanical photocopying, recording or otherwise, without the prior written permission of Bajaj Auto LTD.

Foreword

We have pleasure in presenting the Spare Parts Catalogue for **'Avenger 220 Cruise & Street BS IV'** Motorcycle. This catalogue has been specially designed to assist you in selecting the correct parts for procurement to maintain 100% availability.

The Bajaj spares are subjected to the stringent quality control standards to ensure longer life of the vehicle. It is therefore necessary that only the Genuine Bajaj Spares are used.

In a continual effort to improve Performance and Efficiency of the vehicles, Specifications, Diagrams, Illustrations and Part Numbers can change without notice. Consequently, the description in this Spare Parts Catalogue cannot therefore be final and binding on us.

The modifications / alterations which are carried out after the issue of this catalogue, will be conveyed to you through our Service Circulars. You are requested to make necessary corrections in the Parts Catalogue as per the circulars so as to keep your catalogue up-to-date. This will ensure the appropriate and speedy delivery of the Spare Parts as the order placed will bear the latest part numbers.

In case, if you need any technical assistance contact the concerned Regional Office or write to us on the following address :

Bajaj Auto Limited
Service Department
Akurdi, Pune 411 035 India

Instructions

1. **How to Read the Catalogue :** Open the catalogue and from the pictorial index locate the group in which the part you want to find is present. Turn over to the concerned page number (as given by pictorial index). Now find out the figure of the part you wish to order. Write down the part number against that particular figure number from the text.

   In case, if you have the part number and you need the other details, the part index can be used. The part index (at the end of the catalogue) will give you the figure and page number of the part you wish to order.

2. **How to Order Spare Parts :** The part number and the description of the part required should be invariably mentioned in the order as per the catalogue text.

   The latest part number as conveyed through our service circulars should only appear on the order. In case of ordering painted components, colour shade of the components should be mentioned.

   The quantity shown against the part number is the quantity per vehicle for that group so that particular quantity should be multiplied by the number of sets required.

3. **Part Number System :** We have used 8 digit system for part numbers. The model or hardware item is indicated by first two digits or alphanumeric, the next two or four digits indicate main group and the last four or two digits indicate serial number in main group or serial number or subgroup of fastener respectively. Thus the part numbers will be indicated by 2-2-4 or 2-4-2 digit system. Understanding this system will enable you to identify the spare parts easily.

4. **Abbreviations :** The following abbreviations are used in this catalogue.

Assly	Assembly	V	Volts
N.I.	Not illustrated	W	Watts
C'case	Crankcase	Accl.	Accelerator
Cyl	Cylinder	Comp.	Complete
O/s	Over size	Fr.	Front
Rr.	Rear	Std.	Standard
L	Length	A/t.	Alternate
R.H.	Right hand	L.H.	Left hand
Hex.	Hexagonal	AR	As required

Plate No.	Description	Page No.
1	Cover Cylinder Head	2
2	Cylinder Head	4
3	Valve	6
4	Camshaft / Tensioner	8
5	Cylinder and Piston	10
6	Crankshaft	12
7	Balancer & Balancer Idler Gear	14
8	Transmission	16
9	Change Drum / Shift Fork	18
10	Gear Change Mechanism	20
11	Engine Assly / Crankcase RH	22
12	Crankcase LH	24
13	Cover RH	26
14	Cover Magneto	28
15	Clutch Assly	30
16	Oil Pump	32
17	Oil Cooler Assembly	34
18	Carburetor	36
19	Sai Unit	38
20	Silencer Assly	40
21	Air Cleaner	42
22	Magneto, C.D.I. & H.T. Coil	44
23	Starter Motor & Starter Assembly	46
24	Frame and Frame Fitting	48
25	Frame Fitting	50
26	Swing Arm	52
27	Rear Shock Absorber	54
28	Foot Rest	56
29	Mudguard - Front & Rear	58
30	Stand Assembly	60

Index
AVENGER 220 CRUISE | AVENGER 220 STREET BS IV

Plate No.	Description	Page No.
31	Tyre / Tube and Wheel Rim	62
32	Front Hub	64
33	Rear Hub-Spoke (Cruise)	66
34	Rear Hub-Alloy Wheel (Street)	68
35	Rear Brake Pedal	70
36	Front Master Cylinder	72
37	Front Brake - Caliper & Disc	74
38	Handle Bar Assly	76-78
39	Front Fork	80-82
40	Fuel Tank	84-86
41	Canister Assembly	88
42	Seat / Grip Frame Rear / Cover Grip Frame	90
43	Speedometer	92
44	Cables	94
45	Side Covers / Chain Covers	96
46	Guards	98
47	Head Light	100
48	Tail Light / Reflector Reflex	102
49	Indicator Light	104
50	Electrical Equipment	106
51	Ignition Switch and Control Switch	108
52	Tool Kit & Wind Shield Kit	110
53	Painted Parts and Decals	112-114

PLATE NO. : 1 COVER CYLINDER HEAD	PAGE NO. 1

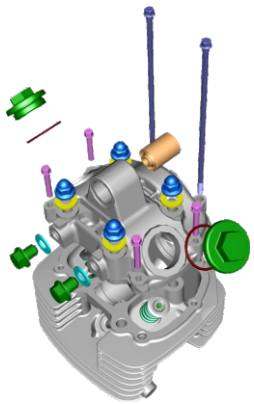

PLATE NO. : 2 CYLINDER HEAD	PAGE NO. 3

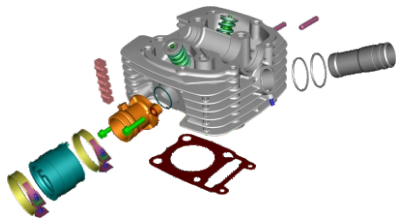

PLATE NO. : 3 VALVE	PAGE NO. 5

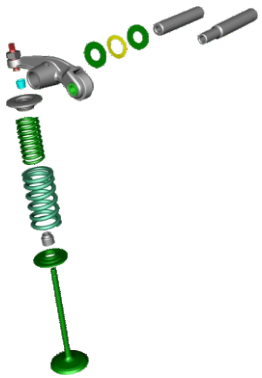

PLATE NO. : 4 CAMSHAFT / TENSIONER	PAGE NO. 7

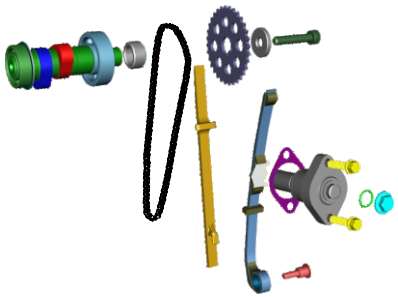

Pictorial Index
AVENGER 220 CRUISE | AVENGER 220 STREET BS IV

PLATE NO. : 5 CYLINDER & PISTON	PAGE NO. 9

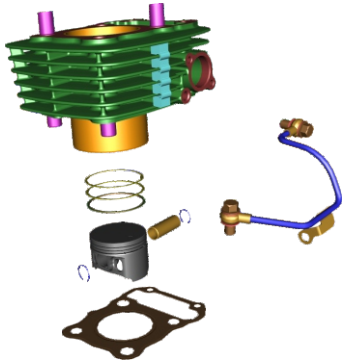

PLATE NO. : 6 CRANKSHAFT	PAGE NO. 11

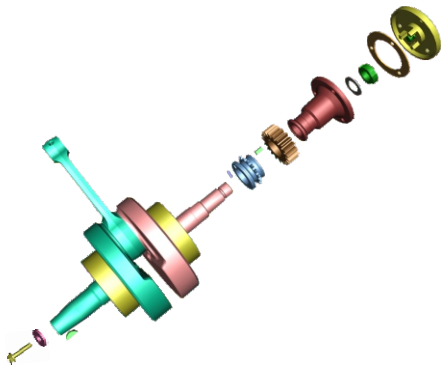

PLATE NO. : 7 BALANCER & BALANCER IDLER GEAR	PAGE NO. 13

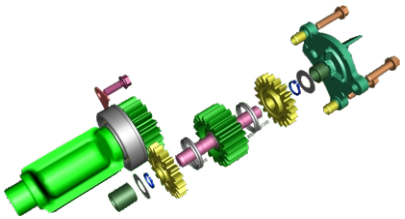

PLATE NO. : 8 TRANSMISSION	PAGE NO. 15

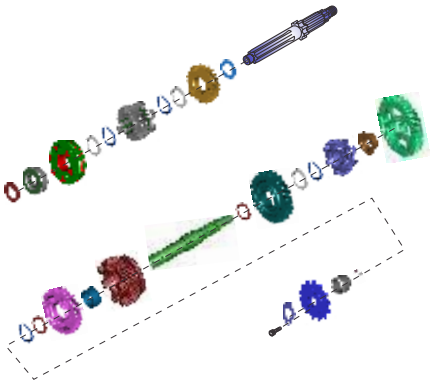

PLATE NO. : 9 CHANGE DRUM / SHIFT FORK	PAGE NO. 17

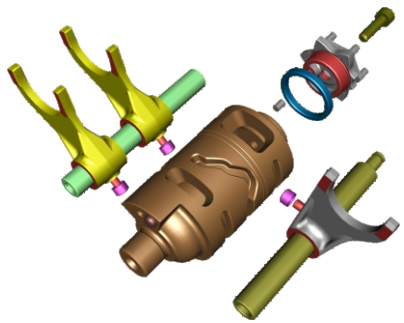

PLATE NO. : 10 GEAR CHANGE MECHANISM	PAGE NO. 19

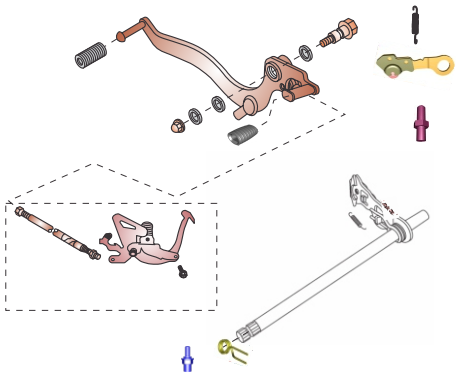

PLATE NO. : 11 ENGINE ASSLY / CRANKCASE RH	PAGE NO. 21

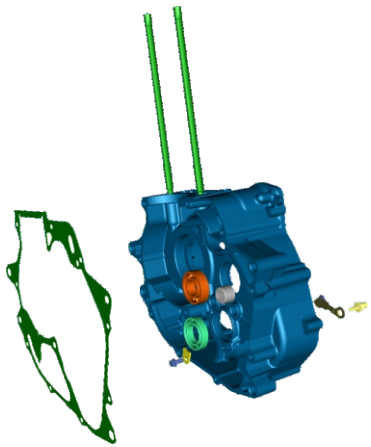

PLATE NO. : 12 CRANKCASE LH	PAGE NO. 23

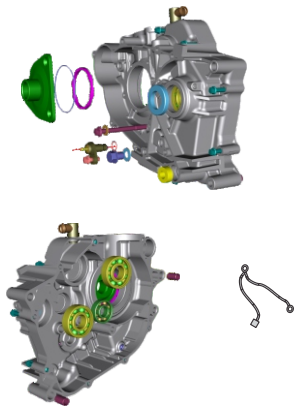

Pictorial Index
AVENGER 220 CRUISE | AVENGER 220 STREET BS IV

PLATE NO. : 13 COVER RH	PAGE NO. 25

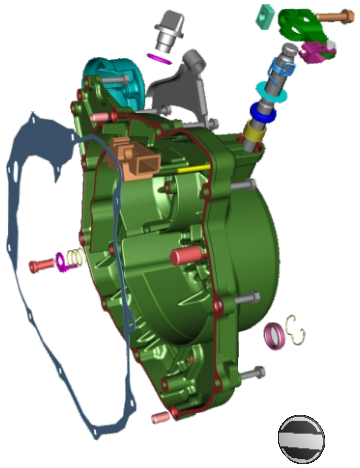

PLATE NO. : 14 COVER MAGNETO	PAGE NO. 27

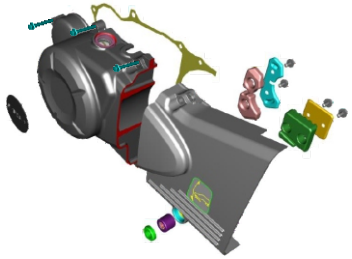

PLATE NO. : 15 CLUTCH ASSLY	PAGE NO. 29

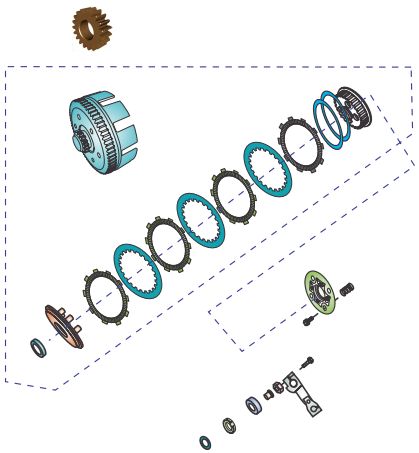

PLATE NO. : 16 OIL PUMP	PAGE NO. 31

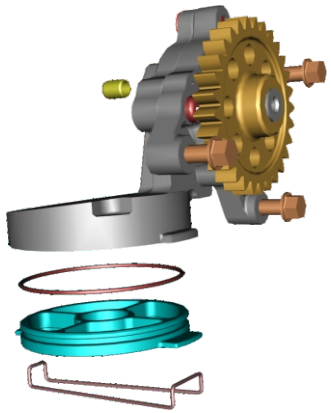

PLATE NO. : 17 OIL COOLER ASSEMBLY	PAGE NO. 33

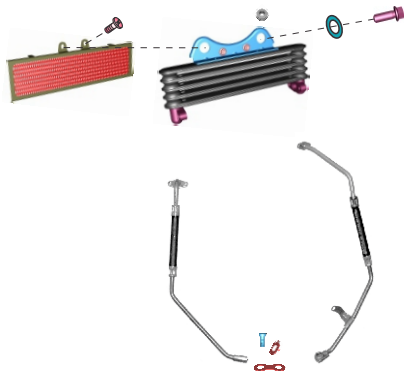

PLATE NO. : 18 CARBURETTOR	PAGE NO. 35

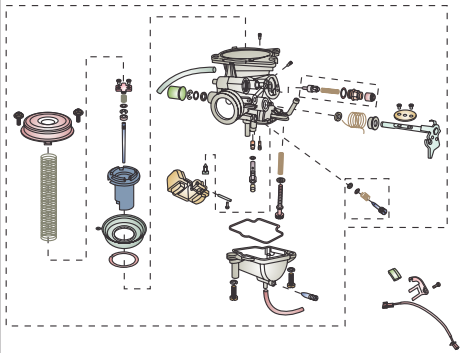

PLATE NO. : 19 SAI UNIT	PAGE NO. 37

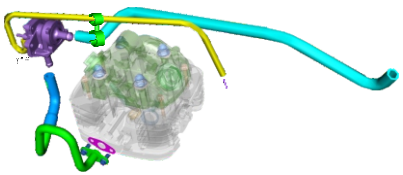

PLATE NO. : 20 SILENCER ASSEMBLY	PAGE NO. 39

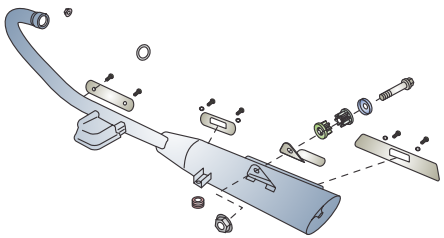

Pictorial Index
AVENGER 220 CRUISE | AVENGER 220 STREET BS IV

PLATE NO. : 21 AIR CLEANER	PAGE NO. 41

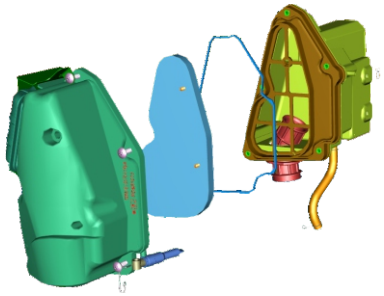

PLATE NO. : 22 MAGNETO, C.D.I. & H.T. COIL	PAGE NO. 43

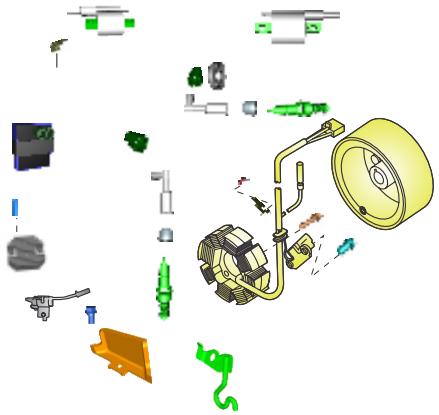

PLATE NO. : 23 STARTER MOTOR & STARTER ASSLY	PAGE NO. 45

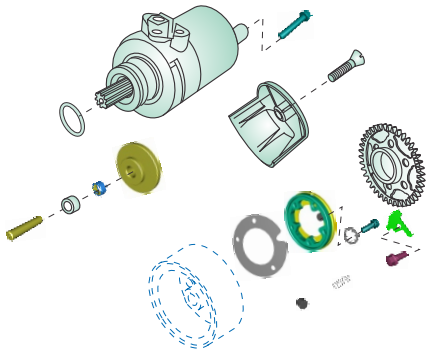

PLATE NO. : 24 FRAME AND FRAME FITTINGS	PAGE NO. 47

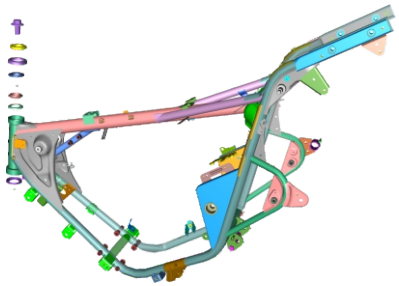

PLATE NO. : 25 FRAME FITTINGS	PAGE NO. 49

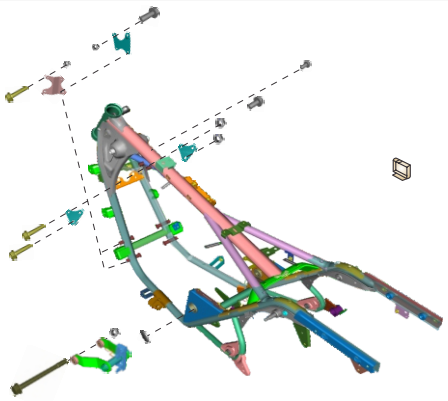

PLATE NO. : 26 SWING ARM	PAGE NO. 51

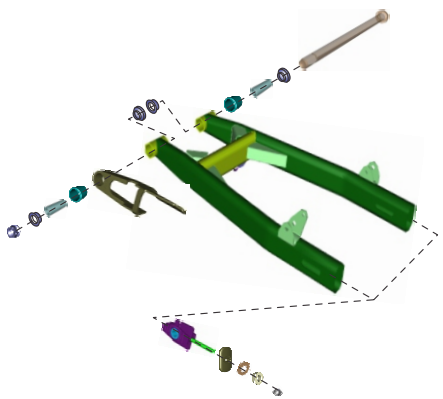

PLATE NO. : 27 REAR SHOCK ABSORBER	PAGE NO. 53

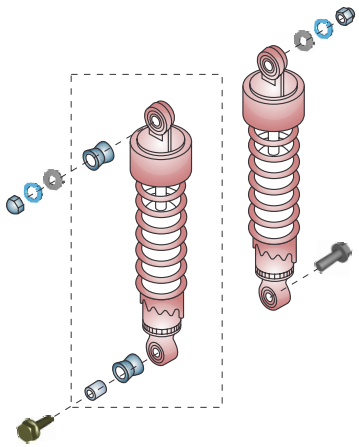

PLATE NO. : 28 FOOT REST	PAGE NO. 55

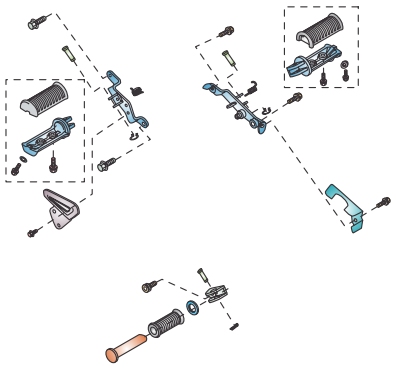

Pictorial Index
AVENGER 220 CRUISE | AVENGER 220 STREET BS IV

PLATE NO. : 29 MUDGUARD - FRONT & REAR	PAGE NO. 57

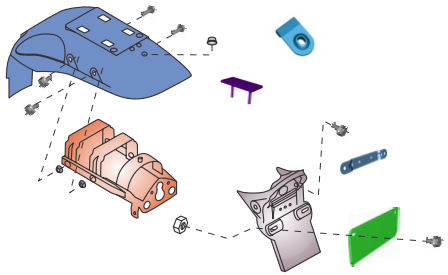

PLATE NO. : 30 STAND ASSEMBLY	PAGE NO. 59

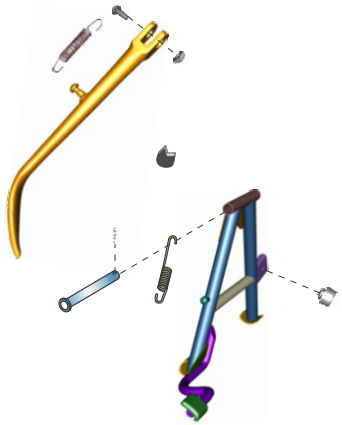

PLATE NO. : 31 TYRE / TUBE AND WHEEL RIM	PAGE NO. 61

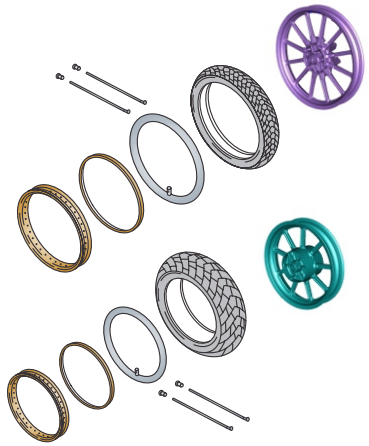

PLATE NO. : 32 FRONT HUB	PAGE NO. 63

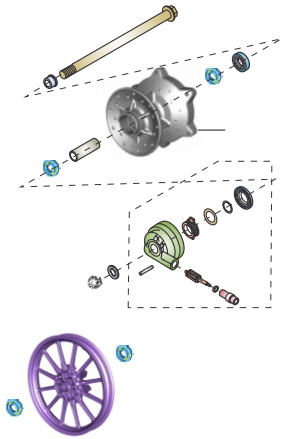

PLATE NO. : 33 REAR HUB - SPOKE (CRUIZE)	PAGE NO. 65

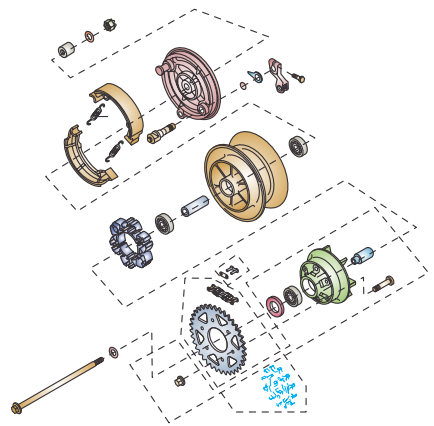

PLATE NO. : 34 REAR HUB - ALLOY WHEEL (STREET)	PAGE NO. 67

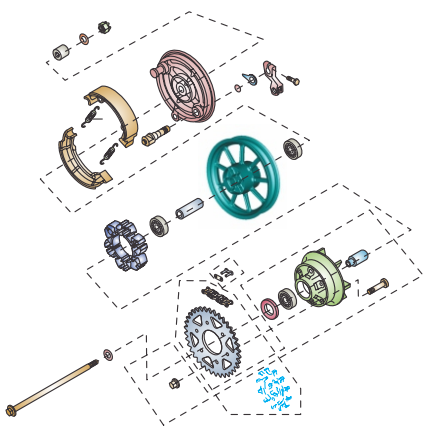

PLATE NO. : 35 REAR BRAKE PEDAL	PAGE NO. 69

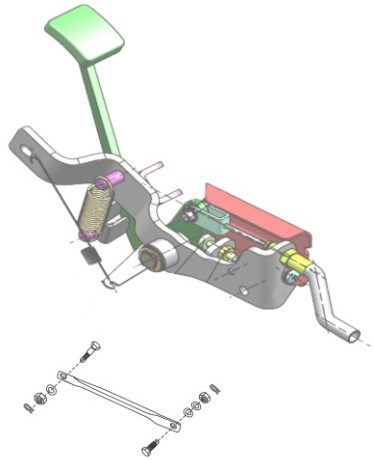

PLATE NO. : 36 FRONT MASTER CYLINDER	PAGE NO. 71

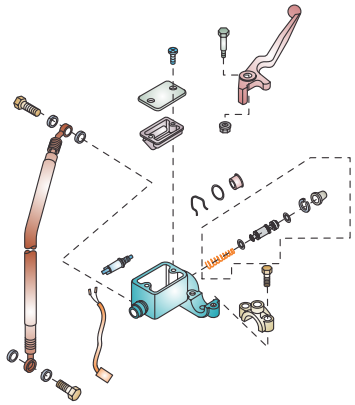

Pictorial Index
AVENGER 220 CRUISE | AVENGER 220 STREET BS IV

PLATE NO. : 37 FRONT BRAKE - CALIPER DISC	PAGE NO. 73

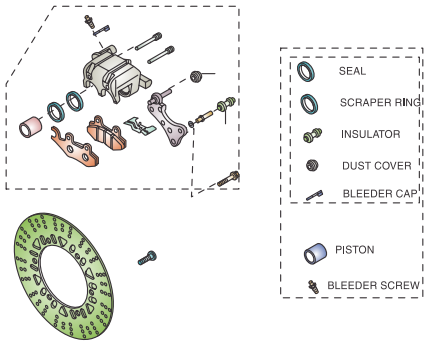

PLATE NO. : 38 HANDLE BAR ASSEMBLY	PAGE NO. 75-77

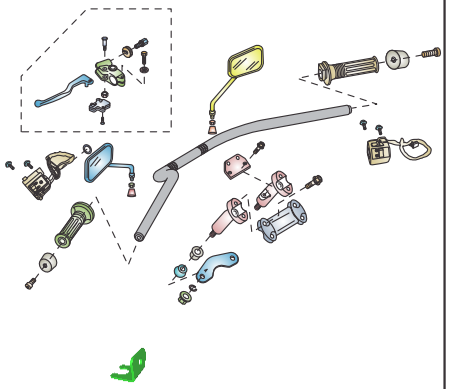

PLATE NO. : 39 FRONT FORK	PAGE NO. 79-81

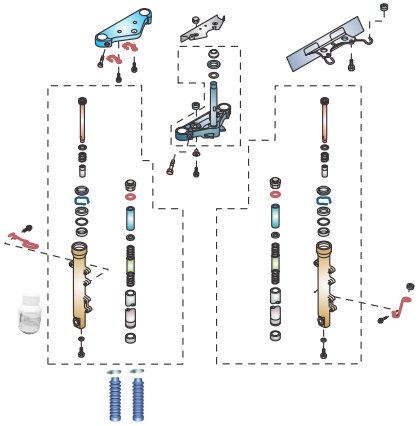

PLATE NO. : 40 FUEL TANK	PAGE NO. 83-85

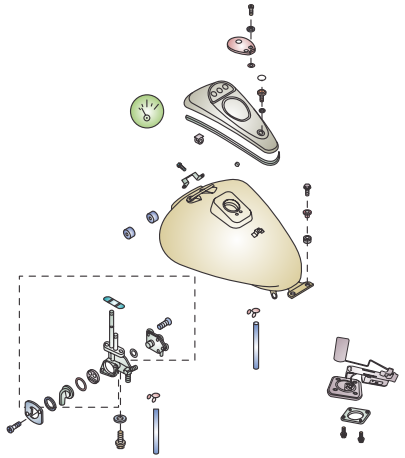

PLATE NO. : 41 CANISTER ASSEMBLY	PAGE NO. 89

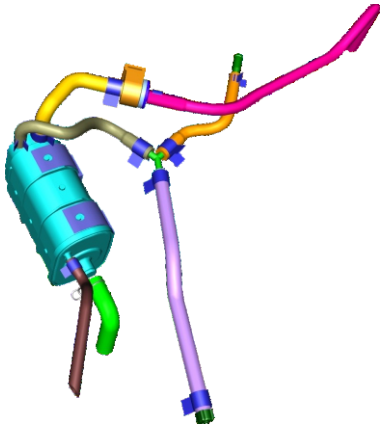

PLATE NO. : 42 SEAT / GRIP FRAME REAR / COVER GRIP FRAME	PAGE NO. 91

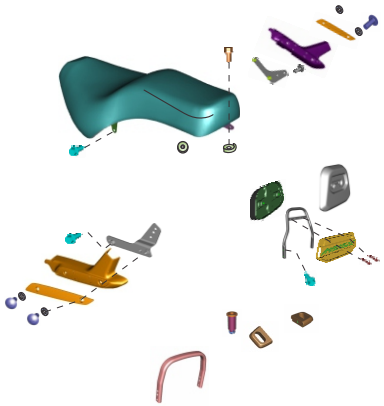

PLATE NO. : 43 SPEEDOMETER	PAGE NO. 93

PLATE NO. : 44 CABLES	PAGE NO. 95

Pictorial Index
AVENGER 220 CRUISE | AVENGER 220 STREET BS IV

PLATE NO. : 45 SIDE COVERS / CHAIN COVER	PAGE NO. 97

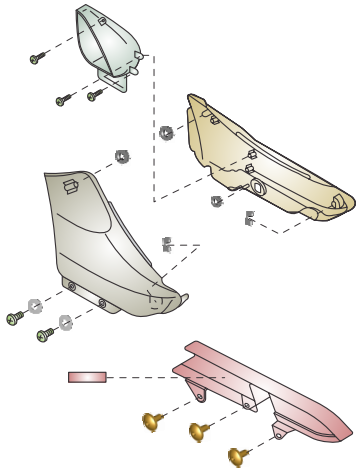

PLATE NO. : 46 GUARDS	PAGE NO. 99

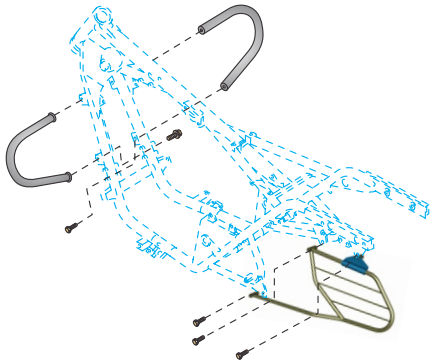

PLATE NO. : 47 HEAD LIGHT	PAGE NO. 101

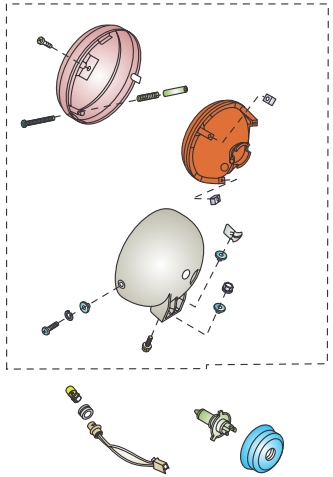

PLATE NO. : 48 TAIL LIGHT / REFLECTOR REFLEX	PAGE NO. 103

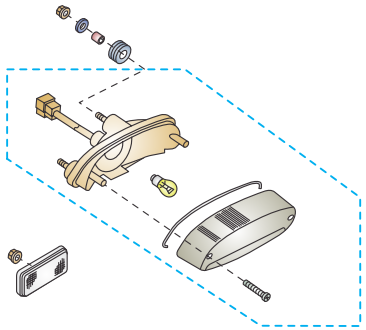

Pictorial Index

PLATE NO. : 49 INDICATOR LIGHT	PAGE NO. 103

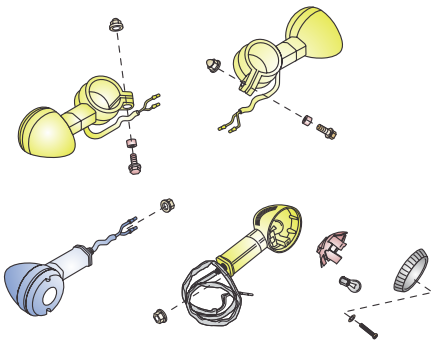

PLATE NO. : 50 ELECTRICAL EQUIPMENT	PAGE NO. 105

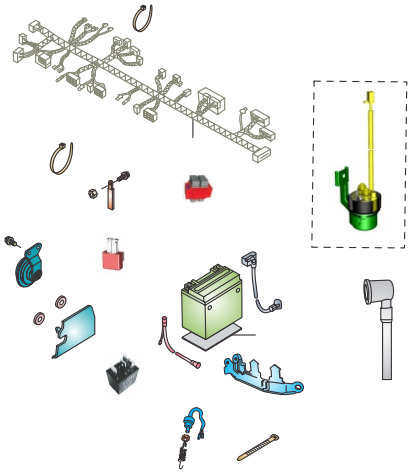

PLATE NO. : 51 IGNITION AND CONTROL SWITCH	PAGE NO. 107

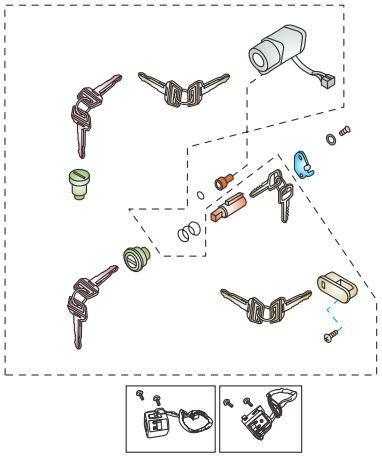

PLATE NO. : 52 TOOL KIT	PAGE NO. 109

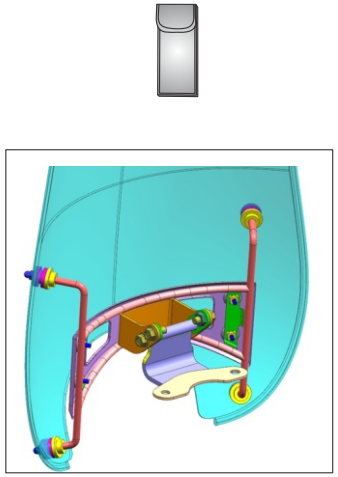

Pictorial Index

PLATE NO. : 53-54 PAINTED PARTS AND DECALS	PAGE NO. 111

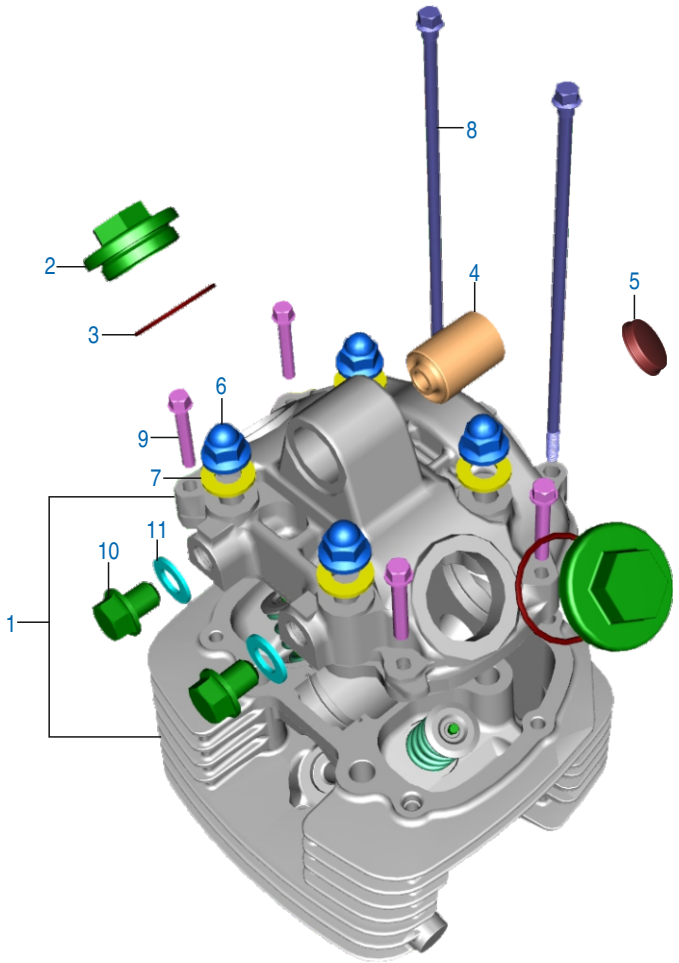

Plate No.: 1

Cover Cylinder Head

No.	Part No.	Description	Cruise Qty.	Street Qty.	Remarks
1	36 PD00 61	Kit Head Cylinder with Cover	1	1	
2	PD 5110 25	Cover Tappet	2	2	
3	36 DS10 01	'O' Ring Kit for Cover Cyl Head	1	1	
4	DS 1011 66	Silent Bush (V)	1	1	
5	DS 1010 96	Camshaft Cap	1	1	
6	39 2647 15	Domed Cap Nut	4	4	
7	DS 1010 84	Copper Gasket (Washer)	4	4	
8	59 0400 23	Hex. Bolt with Flange	2	2	
9	39 1075 04	Hex. Bolt with Flange M6 x 35	4	4	
10	DH 1012 72	Plug	2	2	
11	DG 1014 98	Gasket (Washer)	2	2	

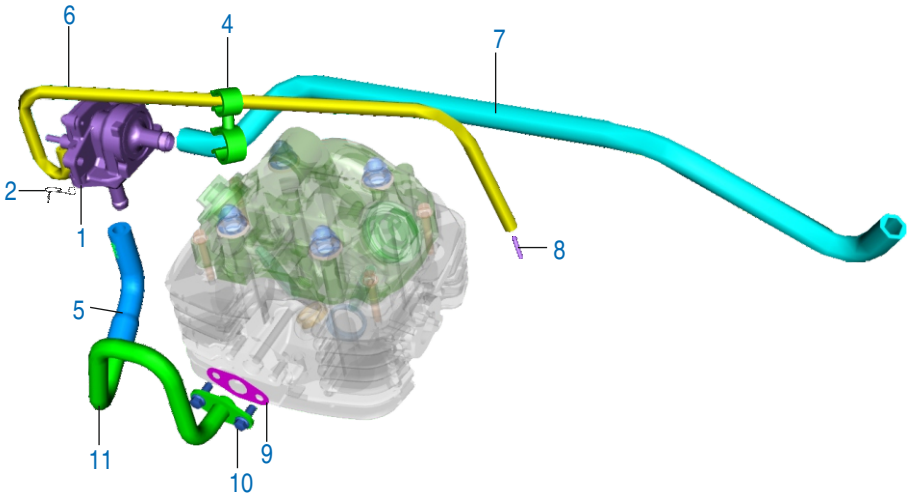

Plate No.: 2

SAI Unit

No.	Part No.	Description	Cruise Qty.	Street Qty.	Remarks
1	PD 5822 00	Unit SAI	1	1	
2	33 1410 08	Clamp	2	2	
3	JL 5810 66	Band Clip	1	1	N.I
4	AA 1410 67	Clip Swivel Spacer	1	1	
5	PD 5824 02	Hose SAI Unit To SAI Pipe	1	1	
6	PD 5824 00	Hose SAI Unit To Intake Manifold	1	1	
7	PD 5824 01	Hose SAI Unit To Air Filter	1	1	
8	JE 5814 16	Nipple Connector Manifold SAI	1	1	
9	DH 1021 80	Gasket Metal Pipe With Flange SAI	1	1	
10	KA EG06 14	Bolt Flanged Small	2	2	
11	DH 1021 74	Metal Pipe With Flange SAI	1	1	
12	JL 5810 65	Clamp Hose SAI	1	1	N.I
13	JE 5810 39	Band Clip SAI Hose Outlet Tube	1	1	N.I

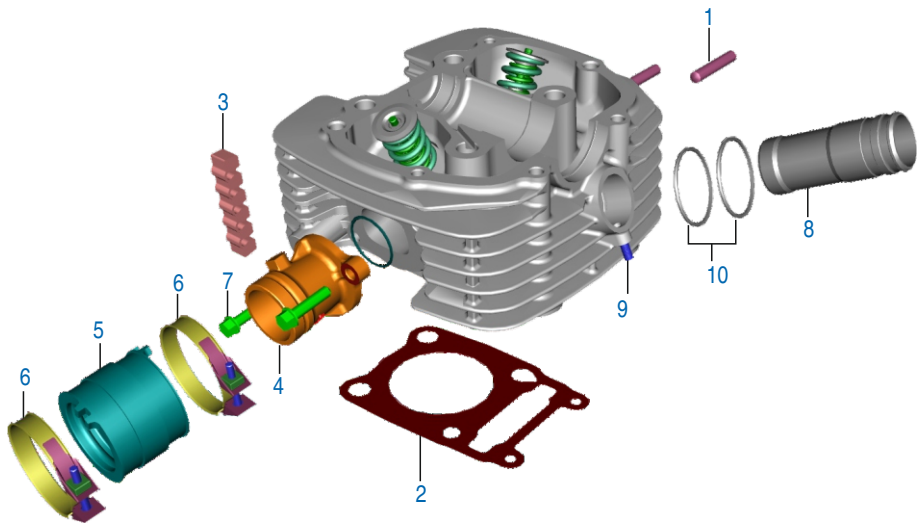

Plate No.: 3

Cylinder Head

No.	Part No.	Description	Cruise Qty.	Street Qty.	Remarks
1	39 1660 05	Stud (Exhaust)	2	2	
2	DK 1010 03	Gasket Cylinder Head	1	1	
3	DH 1015 08	Damper Cylinder Head	5	5	
4	PD 5814 09	Manifold	1	1	
5	PD 5814 02	Insulator Rubber	1	1	
6	DH 1210 38	Clamp for Insulator	2	2	
7	39 1674 04	Hex. Bolt / Flange	2	2	
8	DH 1110 12	Collar - Spark Plug	1	1	
9	39 2608 01	Grub Screw	1	1	
10	36 DS10 01	'O' Ring Kit for Cover Cyl. Head	1	1	Refer Page No. 110

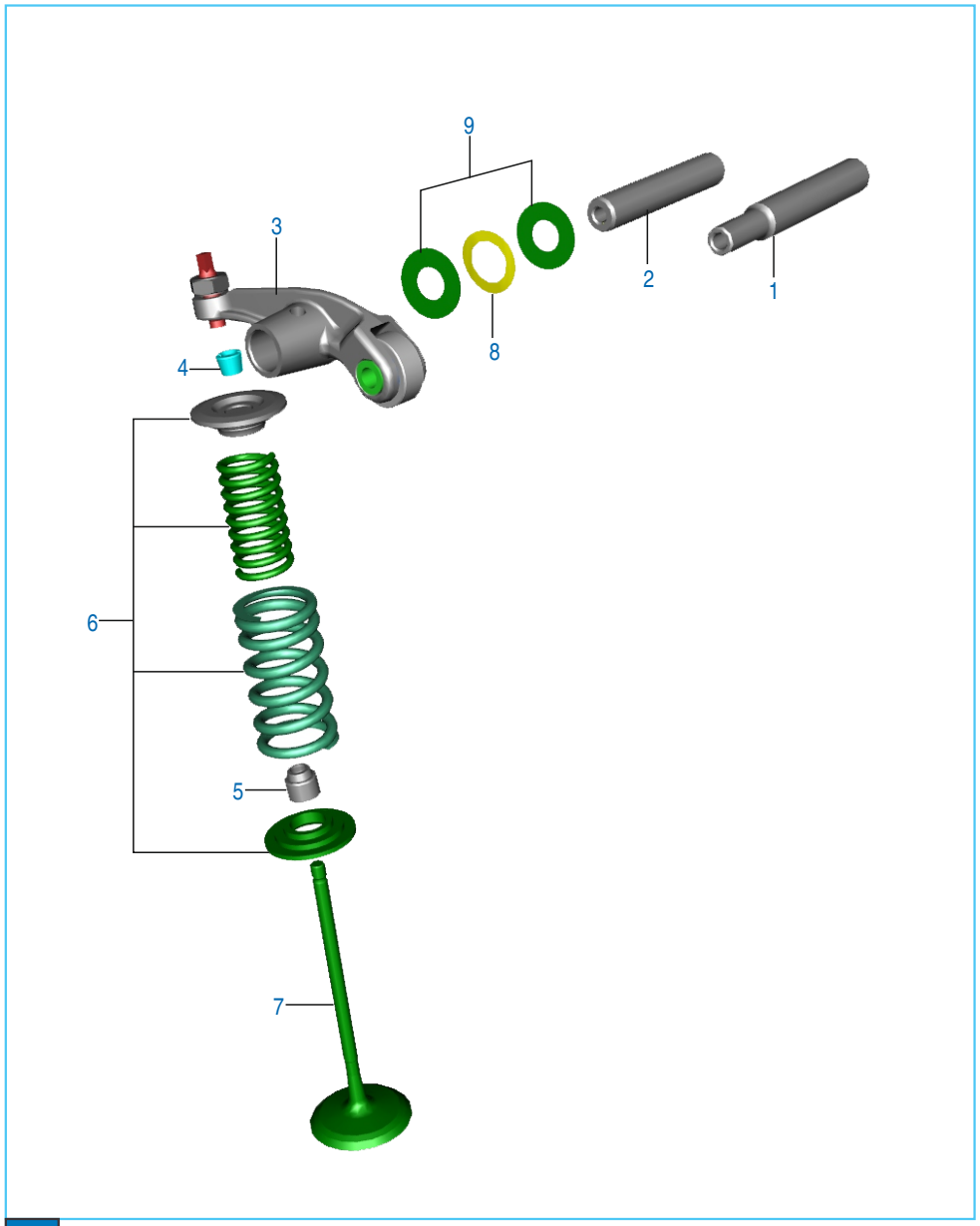

Plate No.: 4

Valve

No.	Part No.	Description	Cruise Qty.	Street Qty.	Remarks
1	DK 1017 48	Rocker Arm Shaft - Intake	1	1	
2	DK 1017 51	Rocker Arm Shaft - Exhaust	1	1	
3	DK 1017 55	Rocker Arm Assembly	2	2	
4	DG 1010 29	Cotter valve	4	4	
5	39 2017 19	Seal valve stem	2	2	
6	DK 1013 26	Valve Repair Kit	1	1	Refer Page No. 110
7	DK 1013 27	Valve Kit	1	1	Refer Page No. 110
8	DH 1012 95	Wave washer	2	2	
9	39 2440 11	Plain washer (Spring Steel)	4	4	

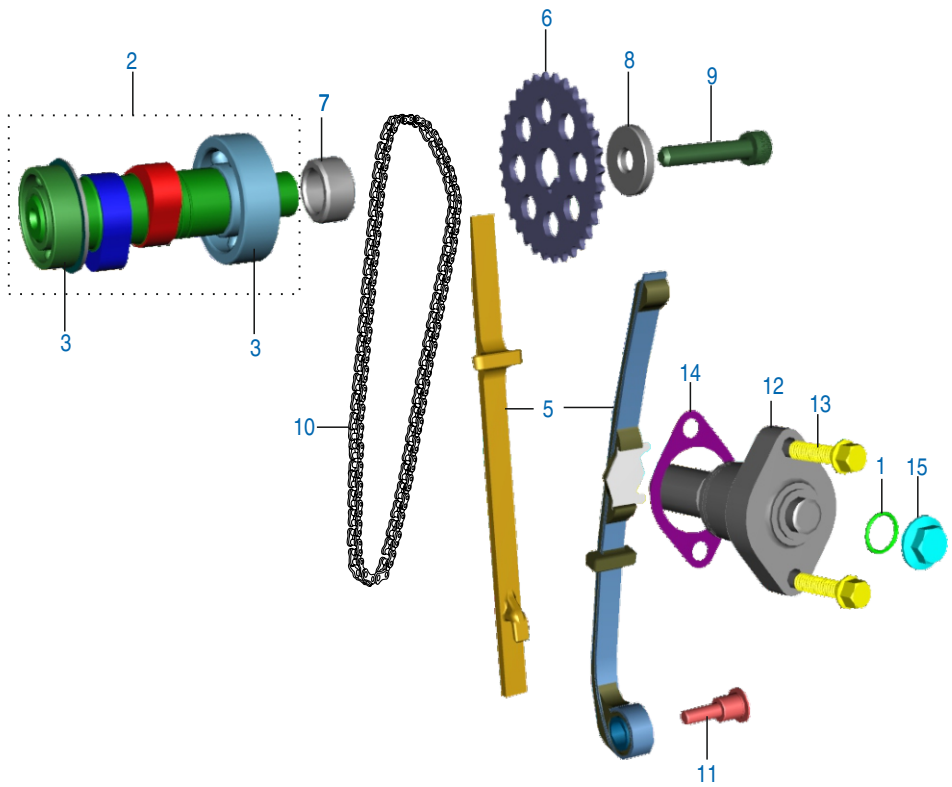

Plate No.: 5

Camshaft / Tensioner

No.	Part No.	Description	Cruise Qty.	Street Qty.	Remarks
1	39 2669 21	Ring 'O' Tension assly	1	1	
2	DK 1016 14	Camshaft Assembly	1	1	
3	39 1880 20	Bearing Ball -15X42X13	2	2	
4	DD 1010 62	Bolt	1	1	
5	DK 1013 30	Guide chain Kit	1	1	Refer Page No. 110
6	PD 5112 29	Sprocket cam Driven (32 T)	1	1	
7	DH 1014 12	Collar cam Sprocket	1	1	
8	DH 1010 48	Special camshaft washer	1	1	
9	DK 1013 86	Hex. Soc. Head cap Bolt	1	1	
10	DK 1010 64	Cam Chain	1	1	
11	DH 1013 92	Cam chain Tensioner pivot Bolt	1	1	
12	JC 1010 34	Tensioner Assly	1	1	
13	39 1673 04	Hex Bolt / Flange	2	2	
14	CS 1011 28	Tensioner assly. gasket	1	1	

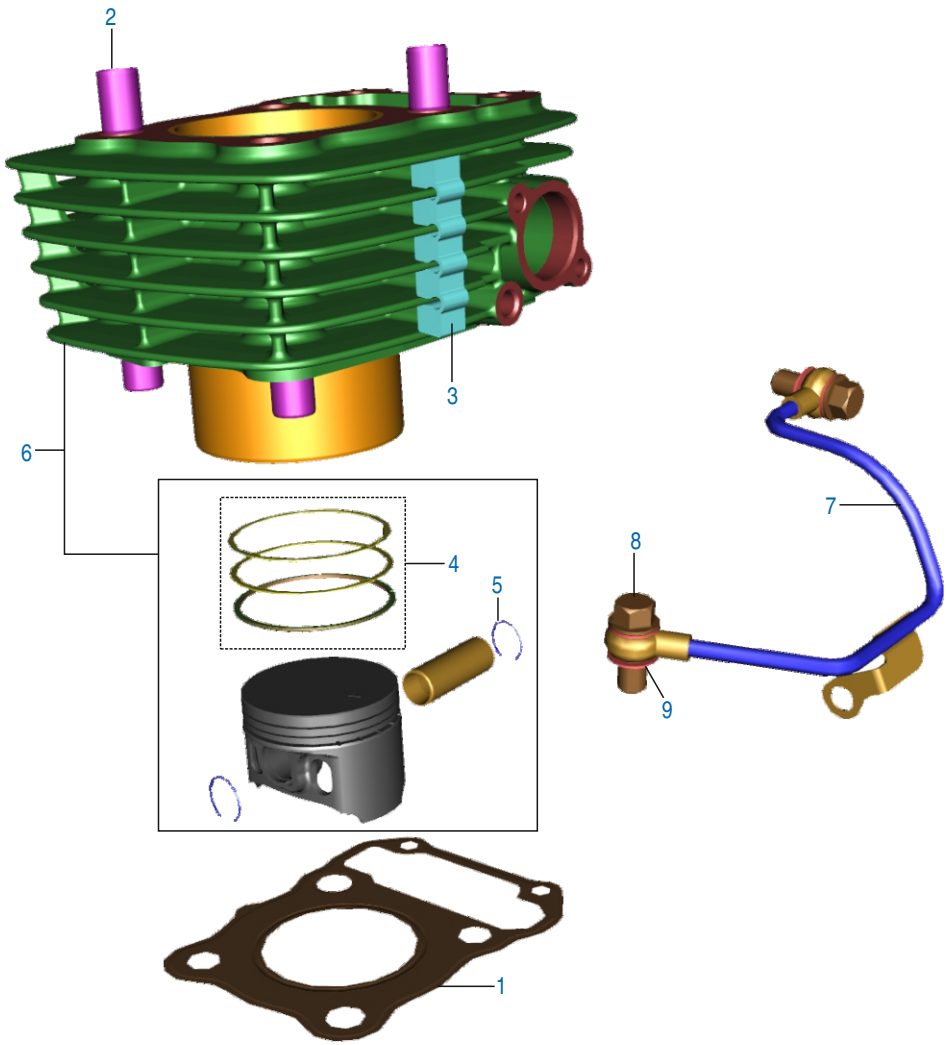

Plate No.: 6

Cylinder and Piston

No.	Part No.	Description	Cruise Qty.	Street Qty.	Remarks
1	DK 1010 63	Gasket Cylinder	1	1	
2	39 2181 06	Pin dowel	4	4	
3	DH 1014 14	Damper	6	6	
4	DK 1013 28	Ring Set Piston	1	1	
5	39 2132 17	Ring Snap	2	2	
6	DK 1016 25	Cyl Block Piston Assly	1	1	
7	DK 1015 92	Oil cooler pipe	1	1	
8	DD 1210 07	Bolt special	2	2	
9	31 1210 06	Washer copper (Gasket)	4	4	

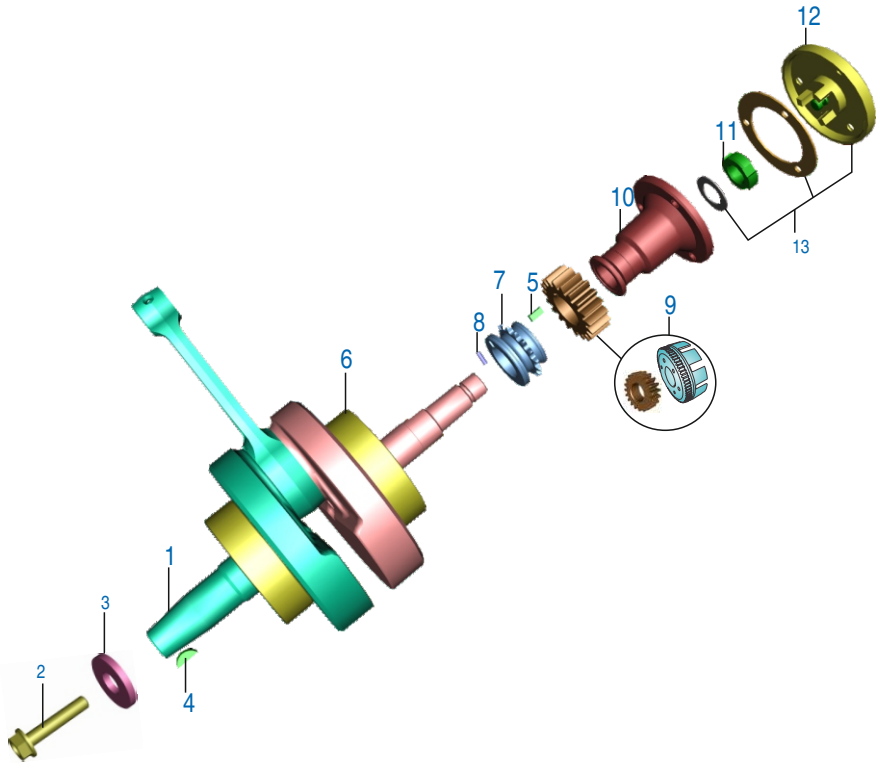

Plate No.: 7

Crankshaft

No.	Part No.	Description	Cruise Qty.	Street Qty.	Remarks
1	DK 1010 65	Crankshaft assly. comp.	1	1	
2	DH 1013 96	Bolt	1	1	
3	39 2165 11	Plain washer	1	1	
4	31 1011 73	Key woodruff	1	1	
5	DS 1011 54	Parallel key	1	1	
6	39 1931 20	Bearing Ball	2	2	
7	DV 1010 48	Sprocket cam drive (16 T)	1	1	
8	39 2203 07	Parallel pin	1	1	
9	36 DK00 38	Kit Gear Primary Drive & Driven	1	1	Refer Page No. 110
10	DH 1010 64	Body centrifugal oil filter	1	1	
11	DH 1011 95	Nut primery drive	1	1	
12	DH 1010 65	Cover centrifugal oil filter	1	1	
13	36 DK00 07	Kit centrifugal over screw oil filter	1	1	Refer Page No. 110

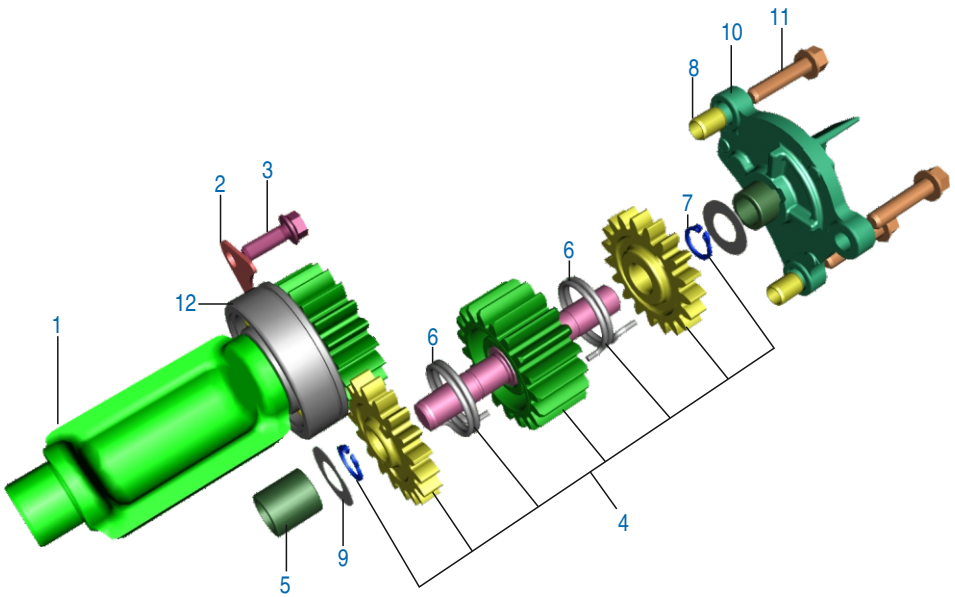

Plate No.: 8

Balancer & Balancer Idler Gear

No.	Part No.	Description	Cruise Qty.	Street Qty.	Remarks
1	DK 1014 16	Body Balancer Assly.	1	1	
2	DH 1010 72	Bearing stopper	1	1	
3	DH 1013 85	Bolt stopper	1	1	
4	DK 1016 25	Assly. Balancer Idler Gear comp.	1	1	
5	39 2152 20	Needle roller bearing	2	2	
6	DH 1014 24	Spring torsion Balancer Idler	2	2	
7	39 2557 17	Circlip ext.	2	2	
8	39 1686 06	Dowel Pin	2	2	
9	39 1620 11	Spring steel washer	2	2	
10	52 DH01 77	Balancer Idler Holder	1	1	
11	39 1674 04	Hex bolt with flange	3	3	
12	59 2000 28	Bearing Balancer	1	1	

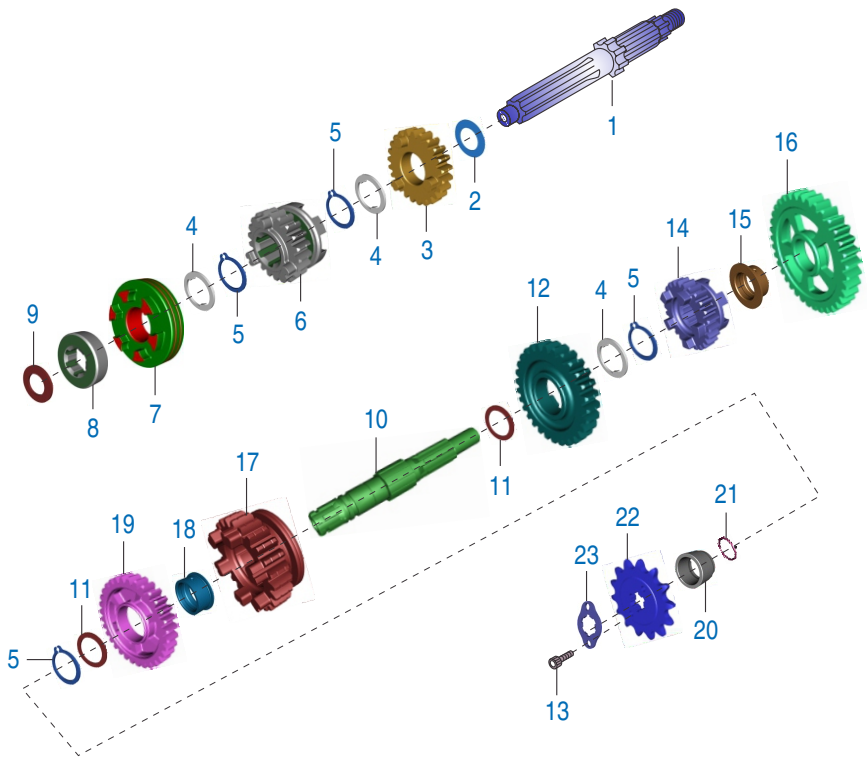

Plate No.: 9

Transmission

No.	Part No.	Description	Cruise Qty.	Street Qty.	Remarks
1	DK 1014 71	Shaft Input Trans Sub Assly	1	1	
2	39 2158 11	Washer plain	1	1	
3	DK 1011 03	Gear 4th Drive	1	1	
4	DH 1010 79	Washer Spline	3	3	
5	DH 1012 35	External Circlip	4	4	
6	DK 1011 02	Gear 3rd Drive	1	1	
7	DK 1016 32	Gear 5th drive	1	1	
8	DH 1010 84	Gear 2nd drive	1	1	
9	39 2160 11	Plain washer	1	1	
10	DK 1011 44	Shaft Output Trans Sub Assly	1	1	
11	39 2166 11	Washer Thrust	2	2	
12	DK 1011 05	Gear 3rd Driven	1	1	
13	AA 1014 37	Bolt (Sprocket mtg)	2	2	
14	DK 1017 18	Gear 4th Driven	1	1	
15	DH 1011 11	Bush 1st driven	1	1	
16	DK 1017 17	Gear 1st driven	1	1	
17	DK 1017 20	Gear 5th Driven	1	1	
18	DH 1013 19	Bush 2nd driven	1	1	
19	DK 1017 19	Gear 2nd Driven	1	1	
20	DK 1012 45	Collar Sprocket	1	1	
21	DK 1013 52	'O' Ring Sprocket Coller	1	1	
22	DV 1010 48	Sprocket Drive	1	1	
23	DJ 1010 63	Plate Drive Sprocket	1	1	

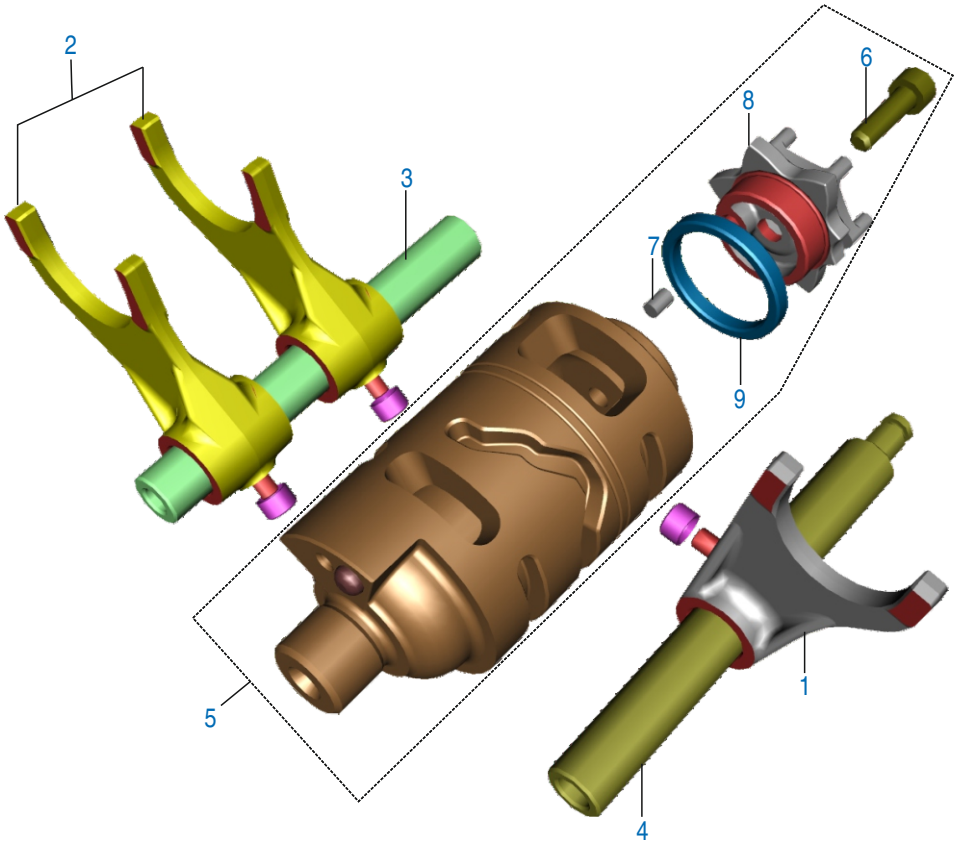

Plate No.:10

Change Drum / Shift Fork

No.	Part No.	Description	Cruise Qty.	Street Qty.	Remarks
1	DK 1011 59	Fork Gear Shift Input	1	1	
2	DK 1011 60	Fork Gear Shift output	2	2	
3	DH 1011 46	Shaft Gear Shift Fork	1	1	
4	DH 1014 93	Shaft Gear Fork Shift	1	1	
5	DK 1017 32	Drum comp. Gear Shift	1	1	
6	39 1197 04	Bolt Socket	1	1	
7	39 2606 07	Parallel pin	1	1	
8	DH 1021 89	Guide Gear Shifter	1	1	
9	DH 1014 96	Spacer	1	1	

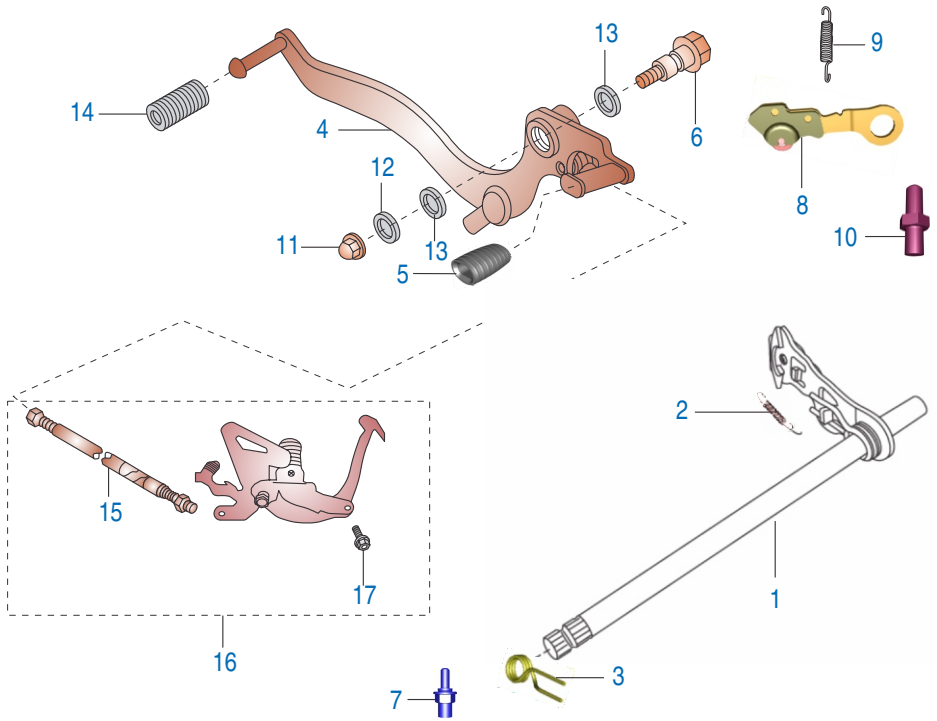

Plate No.: 11

Gear Change Mechanism

No.	Part No.	Description	Cruise Qty.	Street Qty.	Remarks
1	PD 5510 01	Lever comp. Gear Shifter	1	1	
2	DH 1017 14	Spring Arm Reset	1	1	
3	DV 1010 44	Spring Gear Shifter return	1	1	
4	52 DV00 52	Lever comp. change	1	1	
5	DG 1013 39	Damper change pedal (Rear)	1	1	
6	DG 1011 87	Bolt Pivot lever	1	1	
7	DH 1013 93	Bolt Gear Shift drum Stopper	1	1	
8	DK 1017 25	Stopper gear shifter drum	1	1	
9	DV 1010 45	Spring gear shifter drum stopper	1	1	
10	DH 1013 94	Bolt shift change pre coated	1	1	
11	39 2228 15	Domed cap Nut	1	1	
12	39 2400 11	Washer	1	1	
13	39 1998 19	Oil Seal	2	2	
14	31 1011 08	Damper Change Pedal (Front)	1	1	
15	DV 1010 34	Rod assly. Tie	1	1	
16	52 DV00 51	Lever Assly. Change	1	1	
17	DH 1013 93	Hex. Bolt / Flange	1	1	

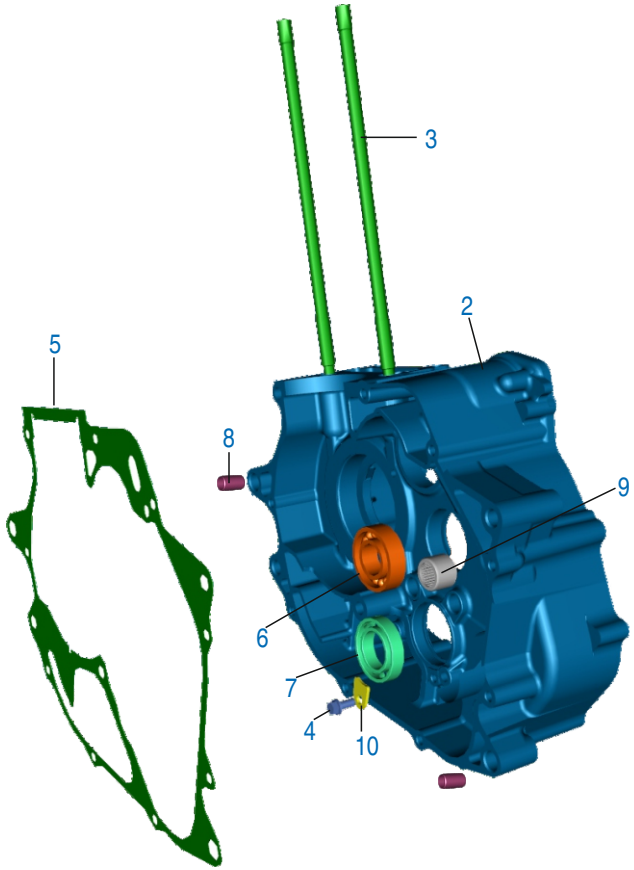

Plate No.: 12

Engine Assembly & Crankcase RH

No.	Part No.	Description	Cruise Qty.	Street Qty.	Remarks
1	PD 5010 21	Engine Assly	1	–	
	PD 5010 25	Engine Assly	–	1	
2	36 PD00 14	Kit Assly Crankcase RH	1	1	Refer Page No. 109
3	59 0500 02	Stud	2	2	
4	AA 1014 37	Bolt Flanged	1	1	
5	DH 1018 96	Gasket Crankcase	1	1	
6	39 2583 20	Bearing Ball (For Input shaft)	1	1	
7	39 2601 20	Bearing Ball (For Output shaft)	1	1	
8	39 2180 06	Dowel Pin	2	2	
9	59 2000 27	NRB (Bearing NRB)	1	1	
10	DH 1014 87	Plate Stopper	1	1	

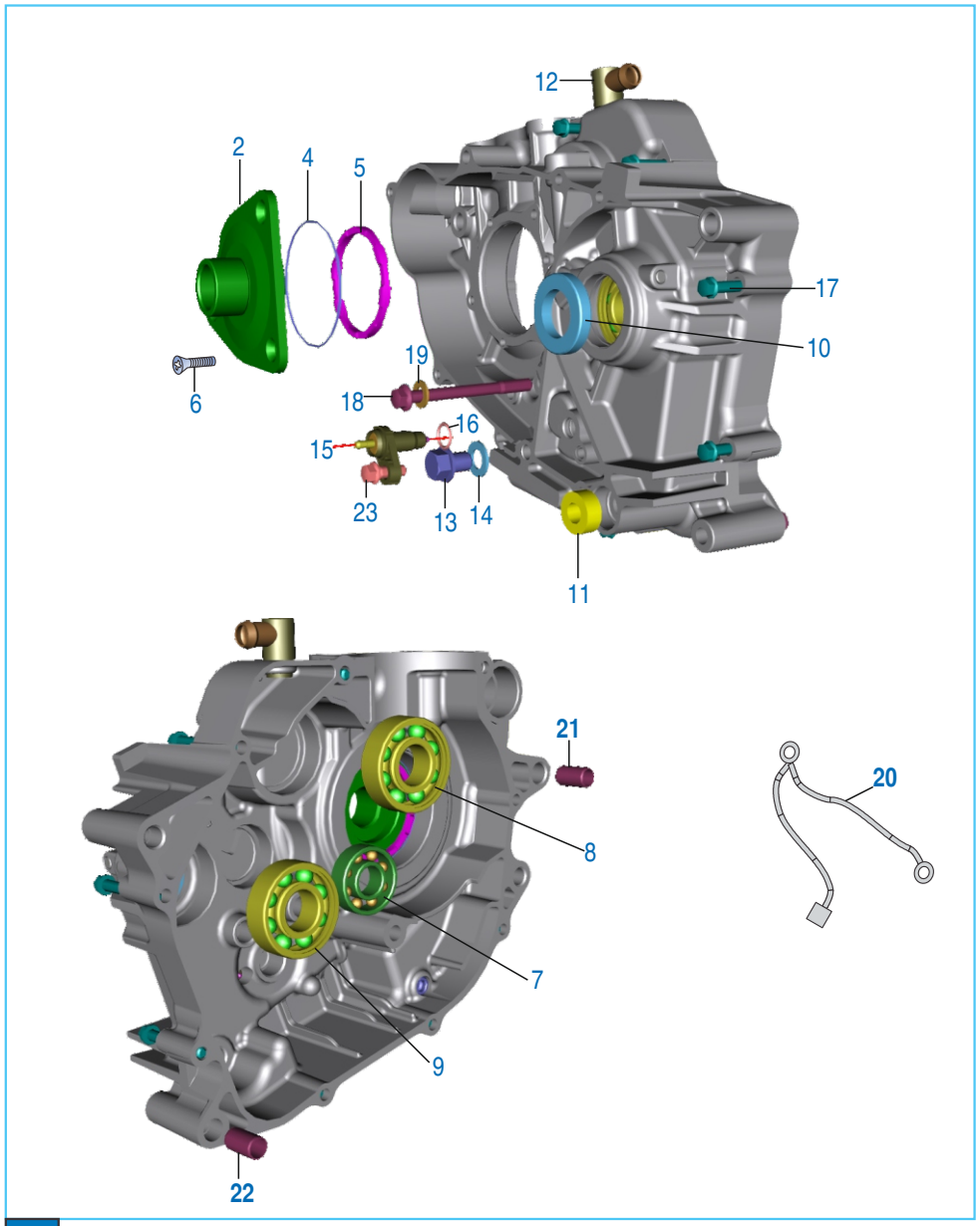

Plate No.: 13

Crankcase LH

No.	Part No.	Description	Cruise Qty.	Street Qty.	Remarks
1	36 PD00 13	Kit Assly Crankcase LH	1	1	Refer Page No. 109
2	DK 1010 94	Guide starter assly	1	1	
3	39 2188 19	Oil Seal	1	1	
4	59 2100 06	'O' Ring	1	1	
5	DK 1010 97	Damper	1	1	
6	39 0752 01	C' Sunk Head Screw	3	3	
7	39 2603 20	Bearing Ball (For Input shaft)	1	1	
8	59 2000 06	Bearing Ball (For Output shaft)	1	1	
9	39 2185 20	Balancer LH Bearing	1	1	
10	30 1010 14	Oil Seal (For Output shaft)	1	1	
11	39 2190 19	Oil Seal (For Shift lever)	1	1	
12	DH 1012 03	Breather pipe fitting	1	1	
13	DH 1016 61	Plug (Drain Bolt)	1	1	
14	DG 1014 98	Washer (Gasket For Drain Bolt)	1	1	
15	DK 1013 80	Switch comp. (Neutral)	1	1	
16	KJ AB10 19	'O' ring neutral switch	1	1	
17	39 1677 04	Bolt	8	8	
18	DH 1013 90	Bolt	1	1	
19	39 2448 11	Plain Washer	1	1	
20	DV 2010 06	Cable assly. (Battery to Earth)	1	1	
21	39 2180 06	Hallow dowel pin	2	2	
22	39 2181 06	Hallow dowel pin	2	2	
23	DH 1013 85	Bolt M6X16 (Neutral Switch)	1	1	

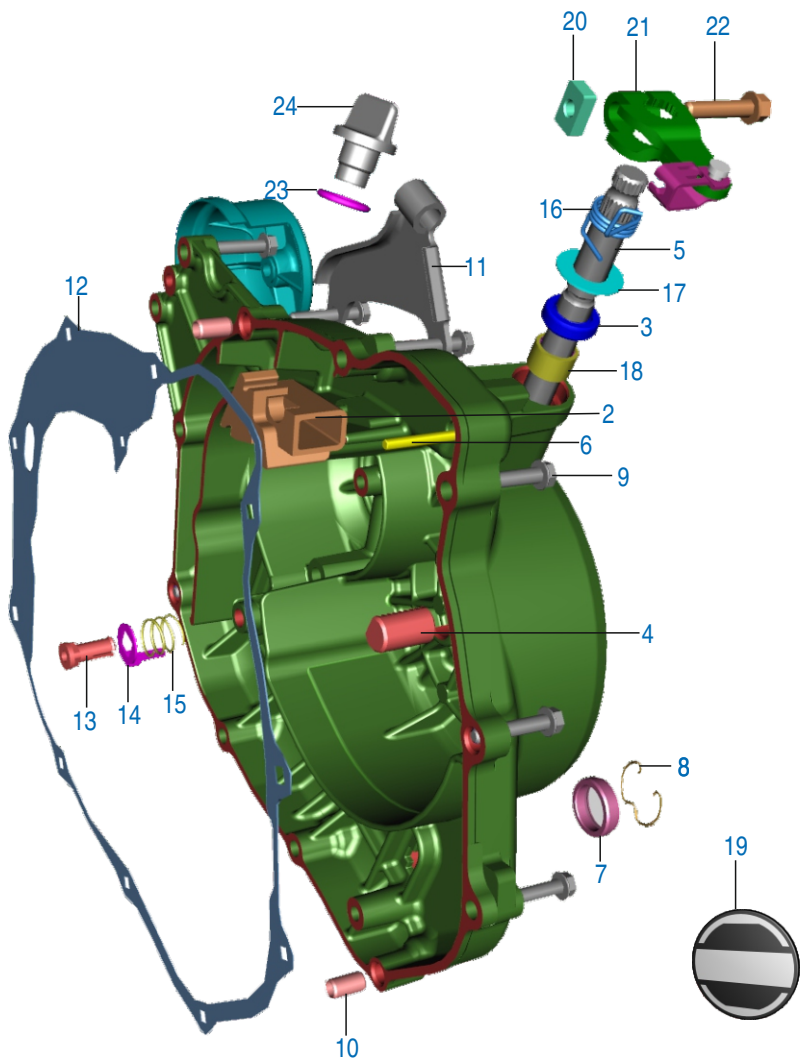

Plate No.: 14

Cover RH

No.	Part No.	Description	Cruise Qty.	Street Qty.	Remarks
1	36 PD00 20	Kit Assly Cl Cover	1	–	Refer Page No. 109
	36 PD00 12	Kit Assly Cl Cover	–	1	Refer Page No.105
2	DH 1011 97	Grommet Breather	1	1	
3	39 1041 19	Oil Seal	1	1	
4	DH 1011 41	Rack	1	1	
5	DH 1011 42	Shaft clutch release	1	1	
6	DK 1012 51	Parallel pin	1	1	
7	DG 1014 18	Gauge	1	1	
8	DS 1012 15	Wire circlip	1	1	
9	DS 1013 53	Bolt	10	10	
10	39 0999 06	Pin Dowel	2	2	
11	DH 1010 18	Bracket Clutch Cable	1	1	
12	DH 1011 54	Gasket cover RH	1	1	
13	DK 1014 80	Plunger Oil	1	1	
14	DH 1210 11	Plate Plunger Oil	1	1	
15	DH 1210 12	Spring Joint ‘A’	1	1	
16	DH 1015 44	Spring torsion clutch lever	1	1	
17	39 2443 11	Washer	1	1	
18	39 1990 20	NRB (Bering Needle)	2	2	
19	DK 1017 38	Decal Clutch Cover	1	1	
20	DH 1012 75	Nut Special	1	1	
21	DK 1016 36	Lever Assly	1	1	
22	39 1674 04	Flange Bolt	1	1	
23	DH 1011 52	O Ring	1	1	
24	DS 1010 71	Cap Oil Filter	1	1	
25	DK 1017 70	Cover Starter Motor	1	1	

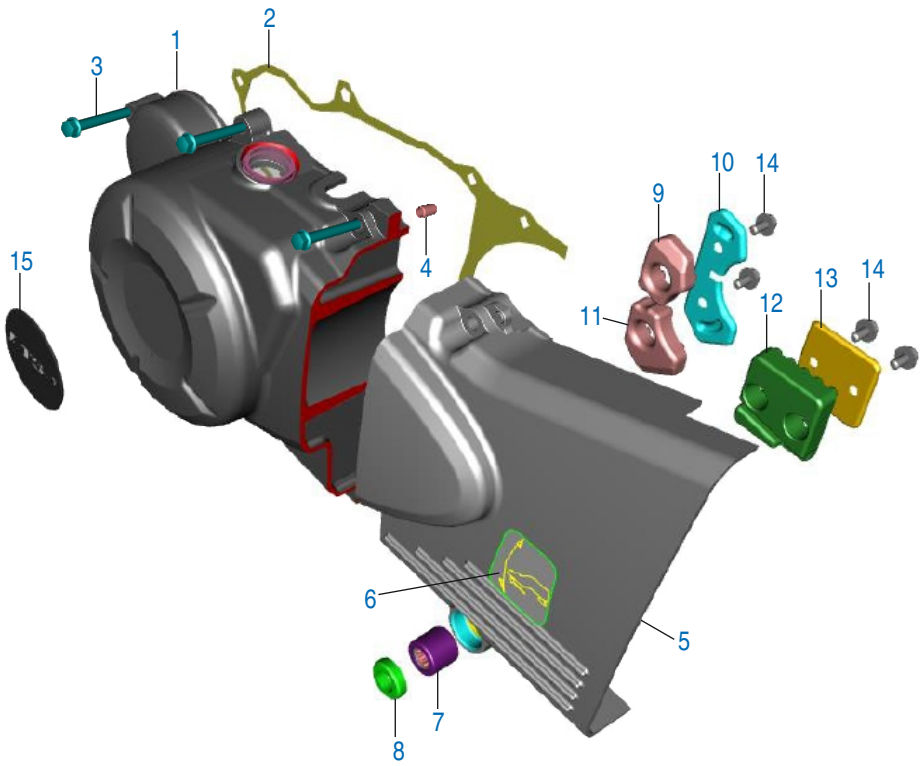

Plate No.: 15

Cover Magneto

No.	Part No.	Description	Cruise Qty.	Street Qty.	Remarks
1	52 DK02 03	Cover Magneto	1	–	Refer Page No.109
	PD 5412 25	Assly Cover Magneto	–	1	
2	DV 1010 42	Gasket Magneto cover	1	1	
3	39 1677 04	Bolt	8	8	
4	39 0999 06	Pin Dowel	2	2	
5	52 PD00 90	Assly Cover LH RR	1	–	
	52 PD01 09	Assly Cover LH RR	–	1	
6	DJ 1610 12	Gear Shift Label	1	–	
	DJ 1612 28	Gear Shift Label	–	1	
7	AP 1010 43	NR bearing (Bearing-Needle)	1	1	
8	JE 5412 12	Decal Magneto Cover	1	1	
9	DH 1012 92	Damper A Cover LH RR	1	1	
10	DH 1012 93	Plate Damper A Cover LH RR	1	1	
11	DH 1012 94	Damper B Cover LH RR	1	1	
12	JM 1000 40	Damper C Cover LH RR	1	1	
13	JM 1000 41	Plate Damper Cover LH RR	1	1	
14	DH 1013 88	Bolt	4	4	

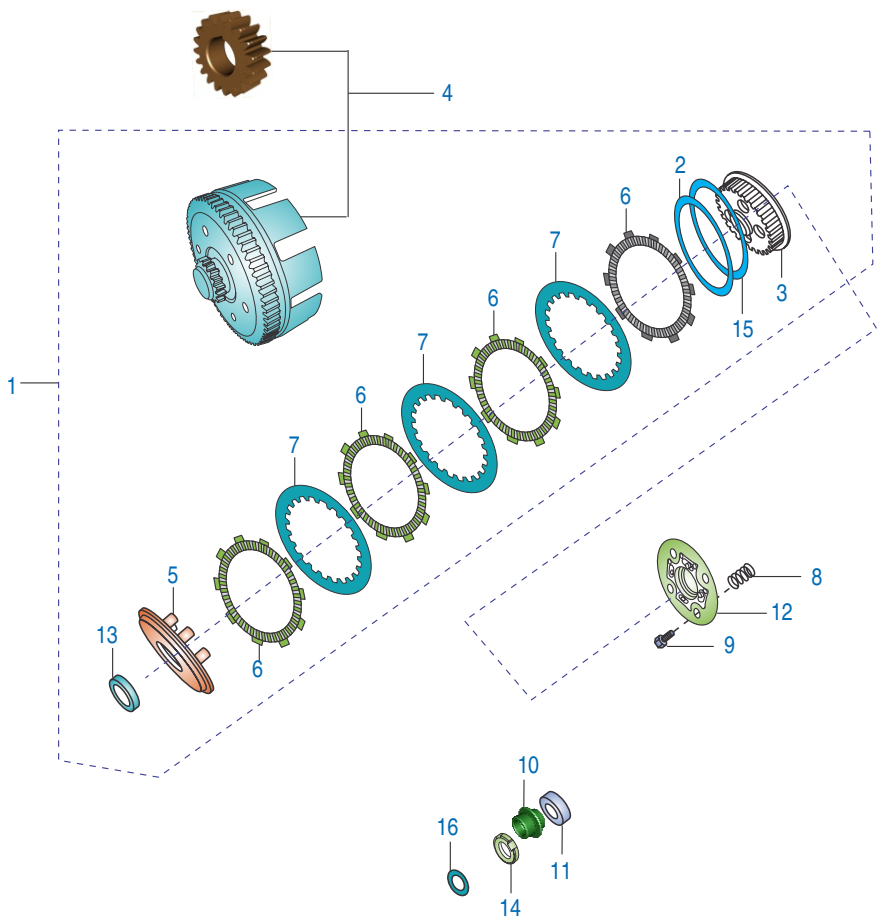

Plate No.: 16

Clutch

No.	Part No.	Description	Cruise Qty.	Street Qty.	Remarks
1	PD 5514 18	Clutch assembly comp.	1	1	
2	DK 1015 71	Spring Judder	1	1	
3	PD 5514 21	Clutch Center	1	1	
4	36 DK00 38	Kit Gear Primary Drive & Driven	1	1	Refer Page No. 110
5	DK 1015 69	Plate Clutch pressure	1	1	
6	36 PD00 30	Friction Plate Kit	1	1	Refer Page No. 111
7	DK 1015 65	Plate Clutch	4	4	
	PD 5514 39	Plate Clutch Pressure Planished	4	–	From JUN'16
8	PD 5514 20	Spring Clutch	5	5	
9	DK 1015 74	Bolt	5	5	
10	DK 1010 72	Clutch Lifter Rod	1	1	
11	JC 1010 85	Bearing Ball 6002/ C3H	1	1	
12	DK 1015 73	Holder Clutch (Plate Clutch Lifter)	1	1	
13	DK 1011 26	Spacer Clutch	1	1	
14	DH 1016 48	Nut Primary drive lock	1	1	LH Thread
15	DK 1015 70	Seat Judder Spring	1	1	
16	39 2200 11	Washer	1	1	

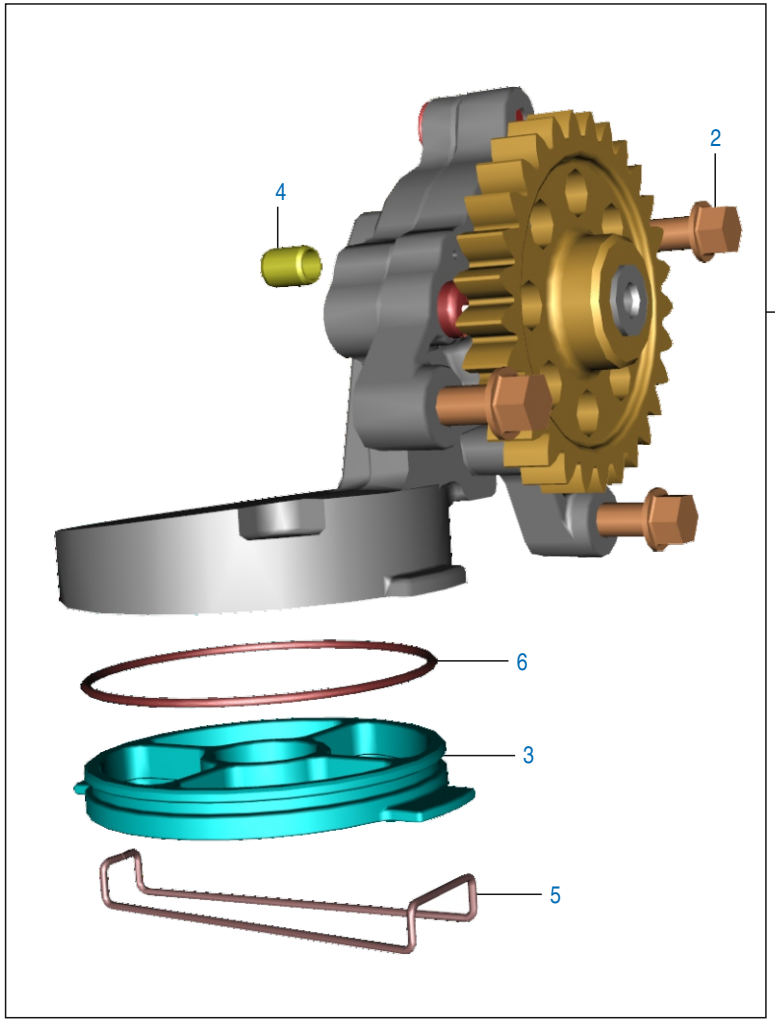

Plate No.: 17

Oil Pump

No.	Part No.	Description	Cruise Qty.	Street Qty.	Remarks
1	52 DH01 69	Oil Pump Assly	1	1	Refer Page No. 111
2	39 1674 04	Hex. Bolt with flange	3	3	
3	DH 1210 10	Mesh filter Oil pump	1	1	
4	39 1686 06	Hollow dowel pin	1	1	
5	DH 1210 35	Clip Mesh Oil filter	1	1	
6	39 2194 21	'O' Ring	1	1	

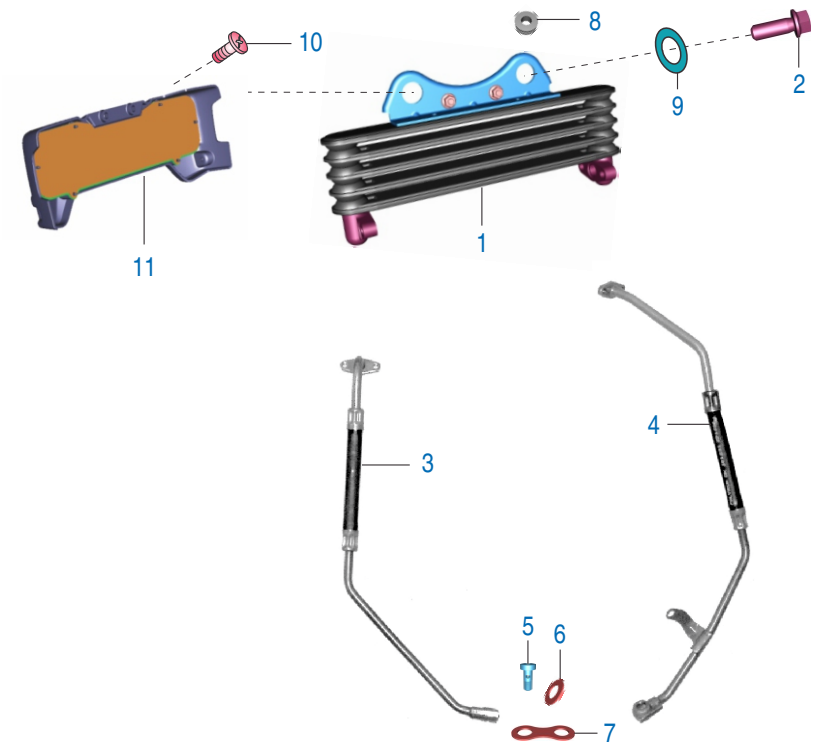

Plate No.: 18

Oil Cooler Assembly

No.	Part No.	Description	Cruise Qty.	Street Qty.	Remarks
1	PD 5712 09	Oil cooler assembly	1	1	
2	39 2310 04	Flanged Bolt	1	1	
3	PD 5712 01	Pipe inlet oil cooler	1	1	
4	PD 5712 03	Pipe outlet oil cooler	1	1	
5	DK 1013 66	Banjo bolt	2	2	
6	DK 1012 37	Gasket Banjo bolt (Washer)	4	4	
7	DK 1012 79	Washer Oil Cooler	1	1	
8	DK 1610 81	Rubber	2	2	
9	39 1507 11	Washer Plain	1	1	
10	KA DG05 20	Hexagon Head Screw	2	2	
11	PD 5712 08	Oil cooler Shroud with mesh	1	–	
	PD 5712 11	Oil cooler Shroud with mesh	–	1	
12	KB AA04 10	Screw	2	2	N.i.
13	LA E000 35	Bolt Small Flanged	2	2	N.i.
14	JM 1610 20	Collar Oil Cooler Mtg	2	2	

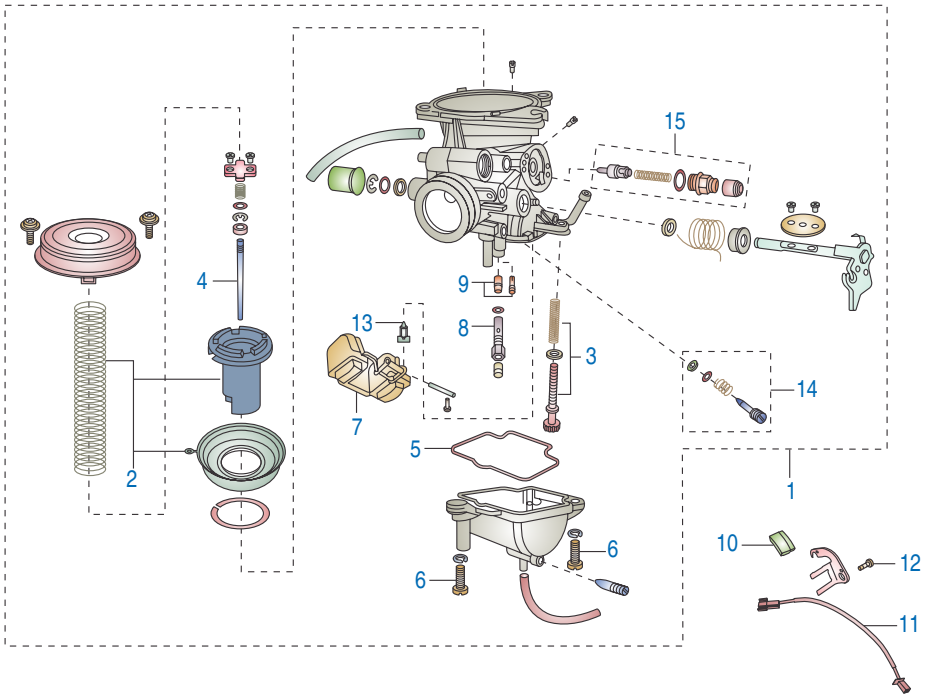

Plate No.: 19

Carburettor

No.	Part No.	Description	Cruise Qty.	Street Qty.	Remarks
1	PD 5812 16	Carburettor Assly.	1	1	
2	36 PD00 32	Vacuum Piston Kit	1	1	
3	PD 5812 03	Idling Screw Kit	1	1	
4	PD 5812 05	Jet needle(JN)	1	1	
5	PD 5812 04	Float bowl “O” ring	1	1	
6	PD 5812 06	Float bowl Screw	2	2	
7	PD 5812 07	Float Assly.	1	1	
8	PD 5812 08	Jet Holder	1	1	
9	36 PD00 31	Jet kit	1	1	
10	PD 5812 11	Needle Assly.	1	1	
11	PD 5812 12	Set Adjuster (PS)	1	1	
12	DJ 1210 59	Set Plunger Assly.	1	1	

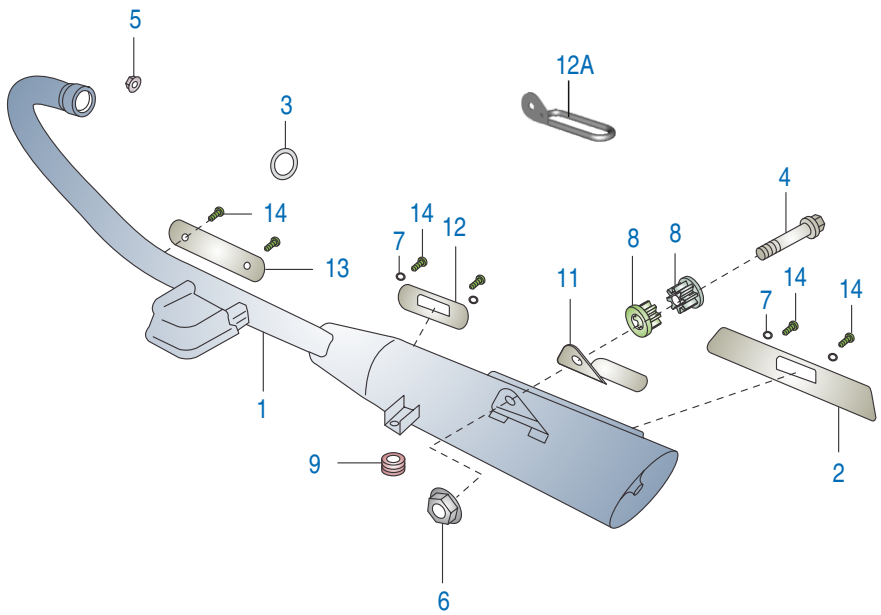

Plate No.: 20

Silencer Assembly

No.	Part No.	Description	Cruise Qty.	Street Qty.	Remarks
1	YP D010 11	Silencer without Shields	1	–	
	YP D030 02	Silencer without Shields	–	1	
2	PD 5910 37	Shield Exhaust Rear	1	–	
	JM 1010 27	Shield Exhaust Rear	–	1	
3	DG 1014 17	Gasket Exhaust	1	1	
4	DG 1012 85	Bolt	1	1	
5	39 2228 15	Domed cap Nut	2	2	
6	39 1225 15	Nut flanged	1	1	
7	PD 5911 00	Washer Shield	4	4	Shield Mounting
8	DG 1014 19	Bushing rubber, muffler	2	2	
9	DG 1611 24	Damper	1	1	
10	39 2754 04	Bolt	1	1	NI
11	DG 2210 38	Guard Muffler	1	–	
11A	PD 2312 04	Guard Muffler- A102	–	1	
12	PD 5910 35	Shield Exhaust Front	1	–	
	JM 1010 22	Shield Exhaust Front	–	1	
13	PD 5910 36	Shield Exhaust Rider	1	–	
	PD 5910 23	Shield Exhaust Rider	–	1	
14	PD 5911 01	Truss Screw	6	6	Shield Mounting

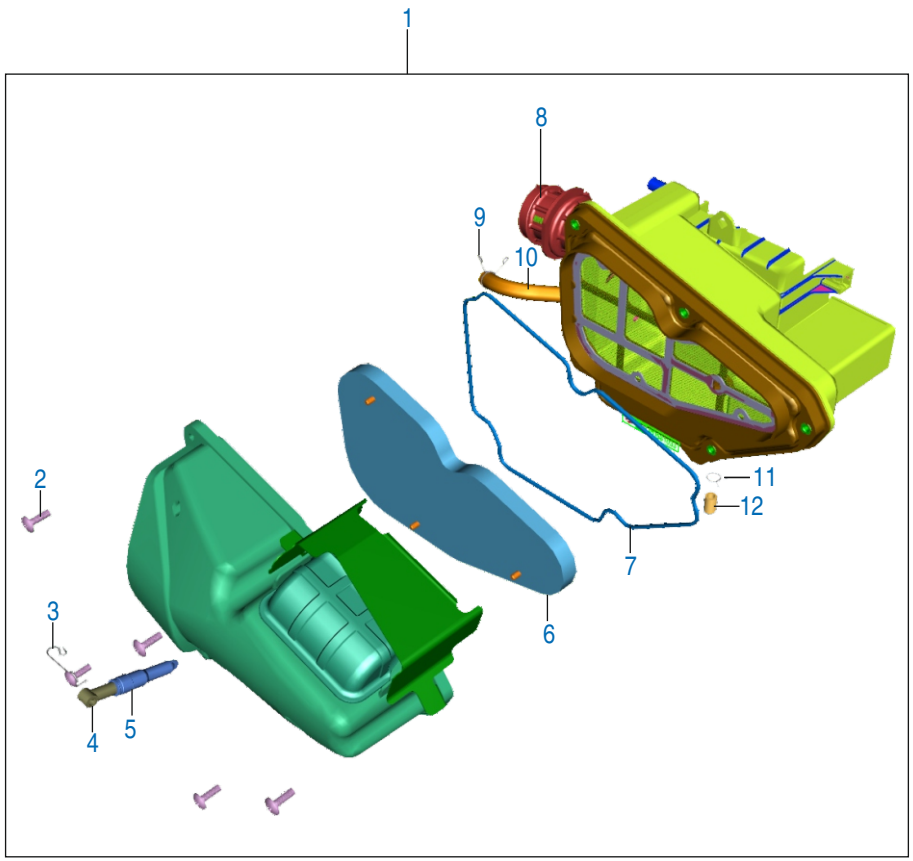

Plate No.: 21

Air Cleaner

No.	Part No.	Description	Cruise Qty.	Street Qty.	Remarks
1	PD 5810 30	Air Filter Assly.	1	1	
2	39 2044 01	Screw M6	5	5	
3	PD 5810 17	Bracket air Filter	1	1	
4	PD 5810 12	Tube Drain	1	1	
5	PD 5810 11	Boot	1	1	
6	DG 1210 10	Element Air Filter	1	1	
7	DG 1210 12	Gasket	1	1	
8	PD 5810 01	Tube Connecting	1	1	
9	DP 1210 18	Clamp	2	2	
10	PD 5810 09	Breather Tube	1	1	
11	JK 5110 02	Clamp	1	1	
12	PD 5810 61	Tube Drain	1	1	

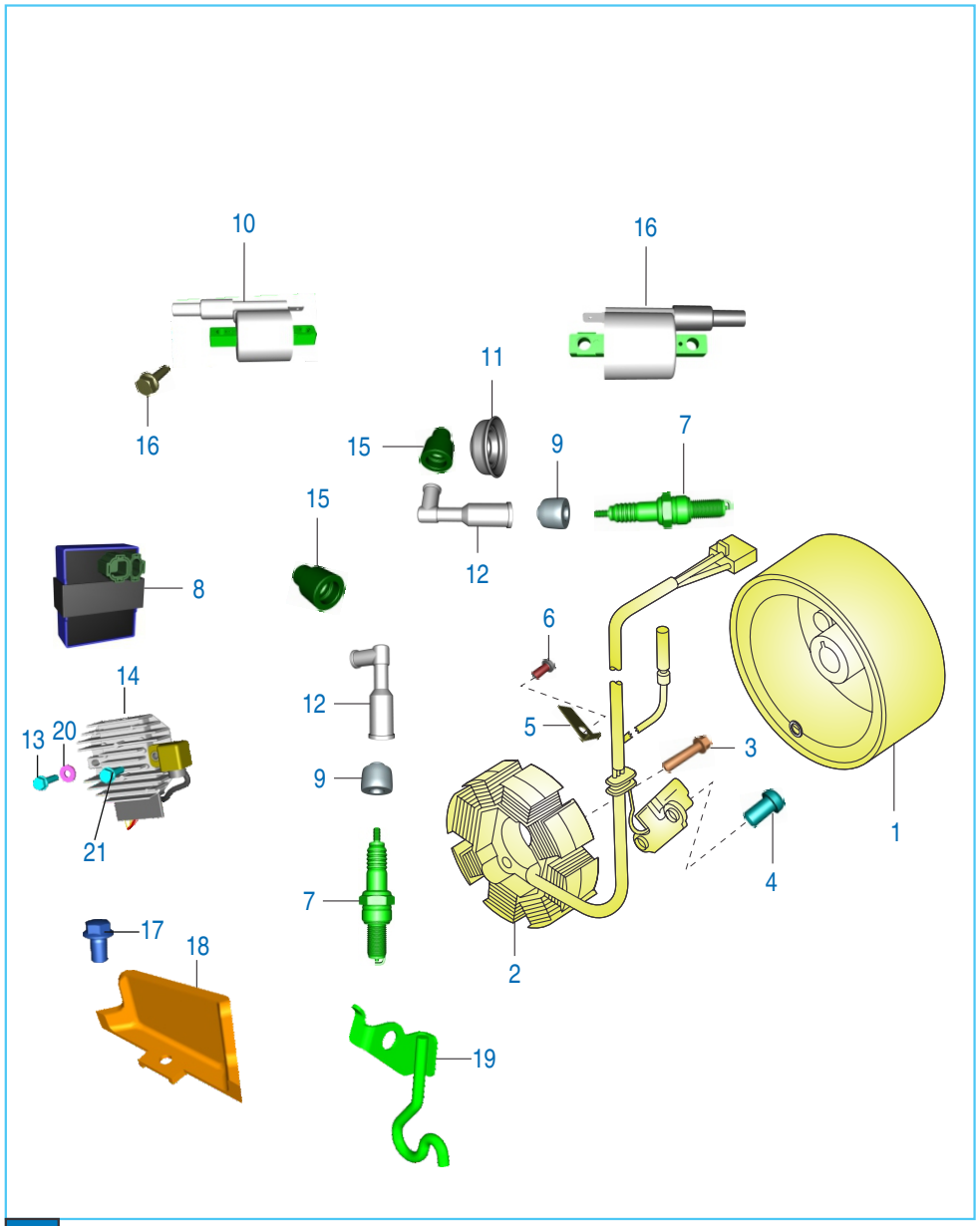

Plate No.: 22

Magneto / CDI / Spark Plug / H.T. Coil

No.	Part No.	Description	Cruise Qty.	Street Qty.	Remarks
1	JC 1110 28	Rotor	1	1	
2	JC 1110 26	Stator Assly. comp	1	1	
3	DK 1012 84	Hex. Bolt with Flange	3	3	
4	DH 1013 81	Pan Head Screw	2	2	
5	DH 1011 99	Stopper plate (wiring harness)	1	1	
6	DH 1013 80	Screw Pan head	1	1	
7	DK 1110 28	Spark plug	2	2	
8	PD 3512 13	C.D.I Assly. / Damper	1	1	
9	DH 1110 13	Grommet Spark Plug cap	2	2	
10	PD 3512 35	H.T. Coil With Cable LH	1	1	
11	DH 1110 16	Grommet Sleeve Spark Plug	1	1	
12	AP 1110 12	Cap Spark Plug	2	2	
13	39 1950 04	Bolt	1	1	
14	PD 4020 05	Regulator Voltage	1	1	
15	DD 1110 12	Grommet H.T. Cable	2	2	
16	PD 3512 37	H.T. Coil With Cable RH	1	1	
17	KA EA06 10	Bolt-flange-kae St-a Dia-06 L-10	1	1	
18	PD 1138 07	Cover Regulator Assly	1	1	
19	PD 5111 29	Bracket HT Cable	1	1	
20	39 0711 11	Washer	1	1	
21	KA DD06 30	Bolt	1	1	

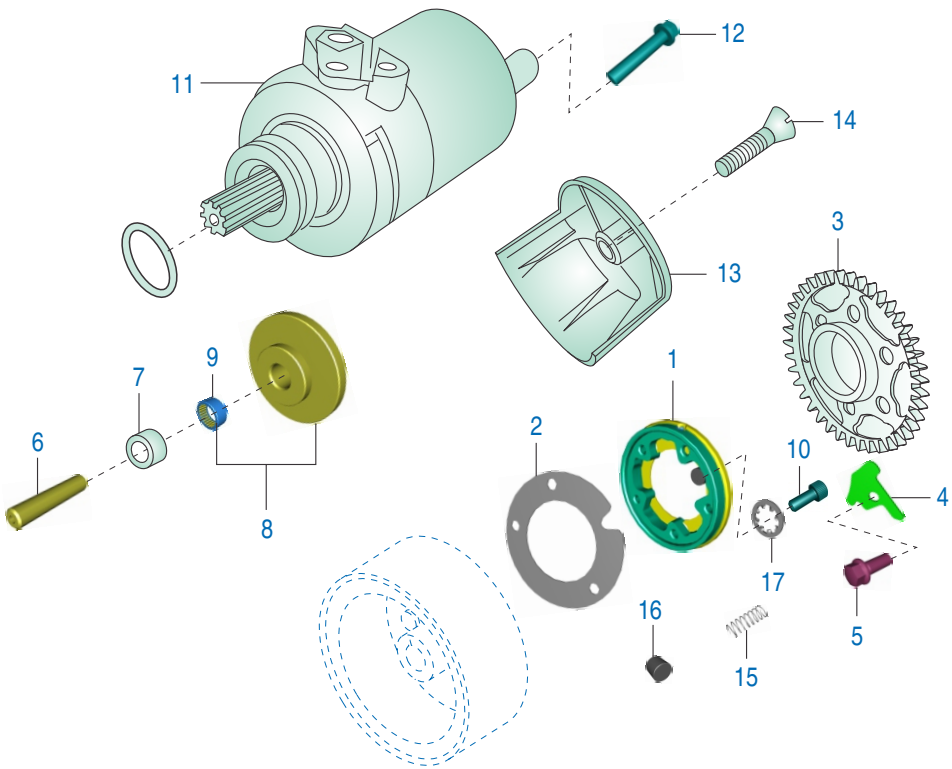

Plate No.: 23

Starter Motor & Starter Assembly

No.	Part No.	Description	Cruise Qty.	Street Qty.	Remarks
1	36 DK00 76	Kit starter clutch Assly	1	1	Refer Page No. 111
2	DK 1016 05	Plate roller clutch	1	1	
3	JC 1011 14	Gear starter clutch	1	1	
4	DH 1015 81	Plate starter clutch gear return	1	1	Stopper plate
5	DH 1013 85	Bolt	1	1	For stopper plate
6	DK 1011 76	Shaft starter counter	1	1	
7	DH 1011 72	Collar starter counter	1	1	
8	JC 1011 15	Gear comp. starter counter assly.	1	1	
9	59 2000 07	Needle roller bearing	1	1	
10	39 0972 04	Bolt socket	3	3	
11	JC 1110 07	Starter Motor	1	1	
12	DS 1013 53	Bolt	2	2	
13	DK 1017 70	Cover starter motor	1	1	
14	39 2285 01	Pre Coated Pan Screw	1	1	
15	36 DK00 77	Kit for st. clutch	1	1	Refer Page No. 111
16	DH 1011 63	Roller	5	5	
18	39 0849 14	Star Washer	3	3	

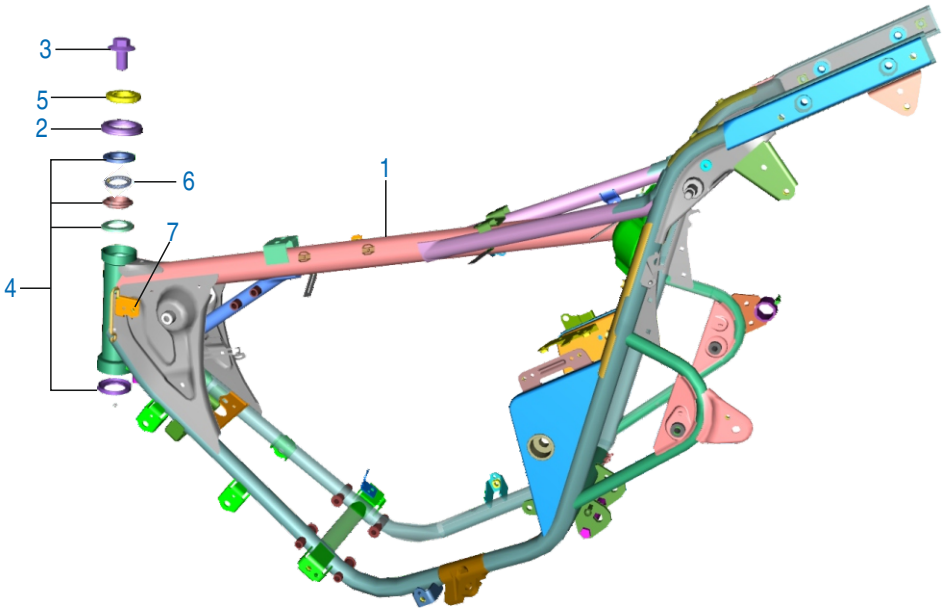

Plate No.: 24

Frame & Frame Fittings

No.	Part No.	Description	Cruise Qty.	Street Qty.	Remarks
1	PD 1110 41	Frame Assly comp.	1	1	
2	PD 1510 06	Cap Steering Stem	1	1	
3	59 0400 05	Bolt flanged	1	1	
4	36 DV00 07	Steering Cone Kit	1	1	Refer Page No. 110
5	DK 1810 75	Nut	1	1	
6	30 1012 36	Ball Steel	39	39	
7	PD 1138 14	Bracket Throttle Cable Routing	1	1	

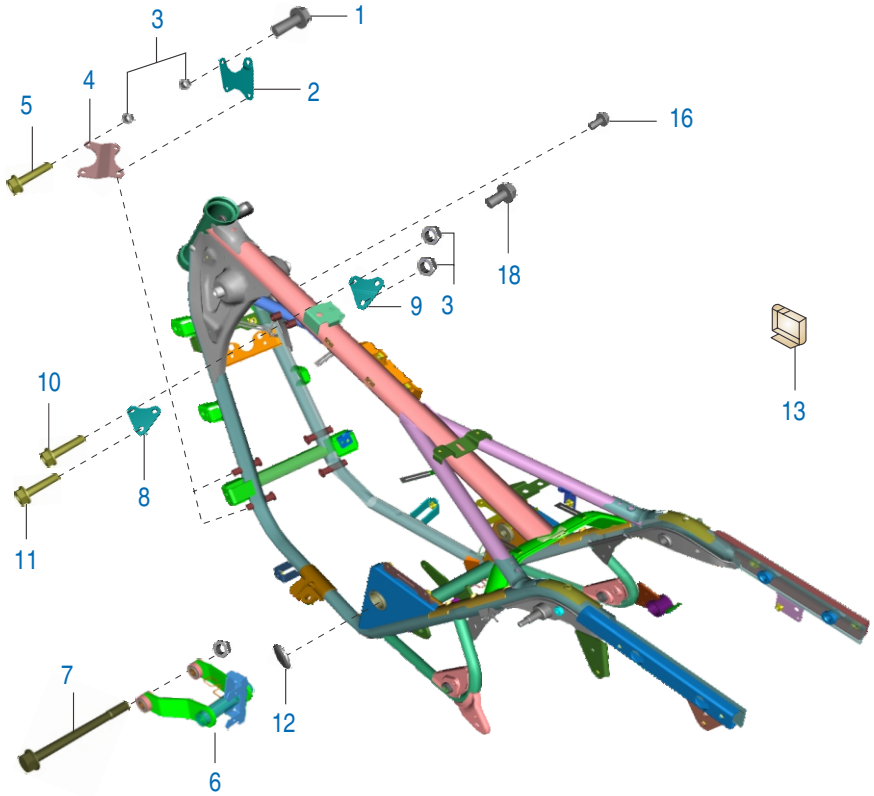

Plate No.: 25

Frame Fitting

No.	Part No.	Description	Cruise Qty.	Street Qty.	Remarks
1	59 0400 42	Bolt, Flanged	1	1	
2	JM 1610 03	Bracket, Engine Mtg. Front RH	1	1	
3	39 1970 15	Hex Nut	11	11	
4	JM 1610 02	Bracket, Engine Mtg. Front LH	1	1	
5	39 1967 04	Bolt	4	4	
6	PD 1134 13	Bracket, Engine Rear	1	1	
7	59 0400 43	Bolt, Allen	1	1	
8	PD 1134 00	Bracket, Engine Top LH	1	1	
9	PD 1134 01	Bracket, Engine Top RH	1	1	
10	39 1967 04	Bolt	4	4	
11	39 2157 04	Bolt	1	1	
12	DG 1611 54	Cap, Pivot	2	2	
13	DG 1611 65	Cap, Tool case	1	1	

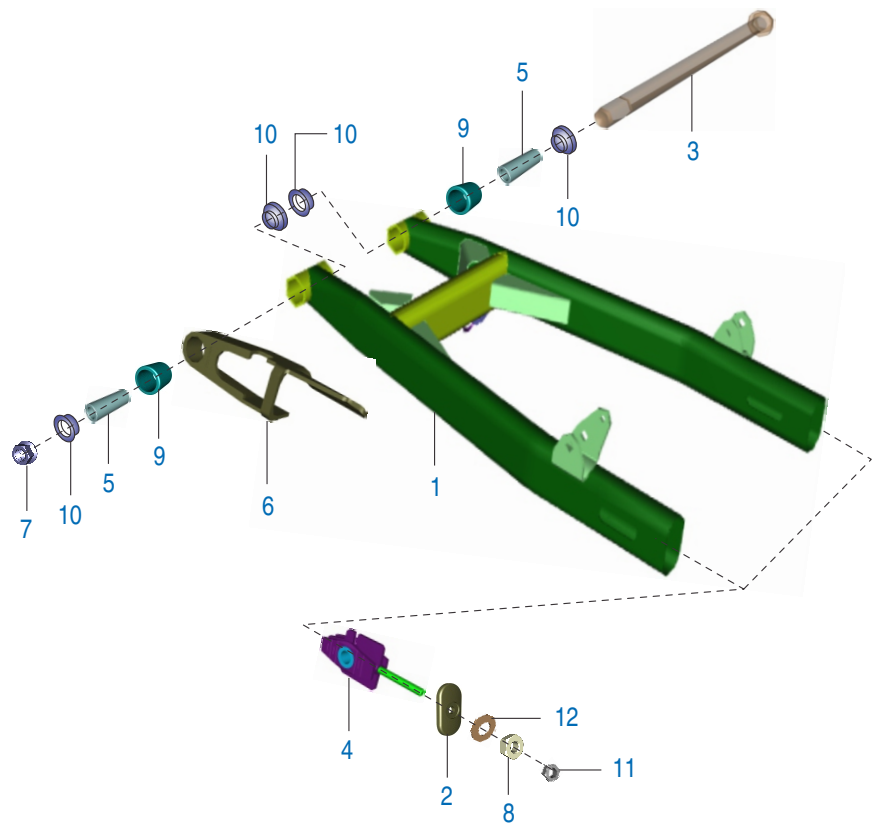

Plate No.: 26

Swing Arm

No.	Part No.	Description	Cruise Qty.	Street Qty.	Remarks
1	PD 1220 00	Arm Comp. Swing	1	1	
2	JM 1710 04	Cap chain Adjuster	2	2	
3	JL 1220 26	Shaft Swing Arm	1	1	
4	JM 1710 03	Adjuster Chain	2	2	
5	DG 1710 16	Sleeve	2	2	
6	DG 1710 34	Guard, Chain	1	1	
7	39 1053 15	Nut	1	1	
8	DG 1710 22	Nut	2	2	
9	DG 1710 18	Bearing Needle	2	2	
10	DG 1710 19	Seal Oil	4	4	
11	39 1997 15	Nut Hex small	2	2	
12	39 1224 11	Washer Plain small	2	2	

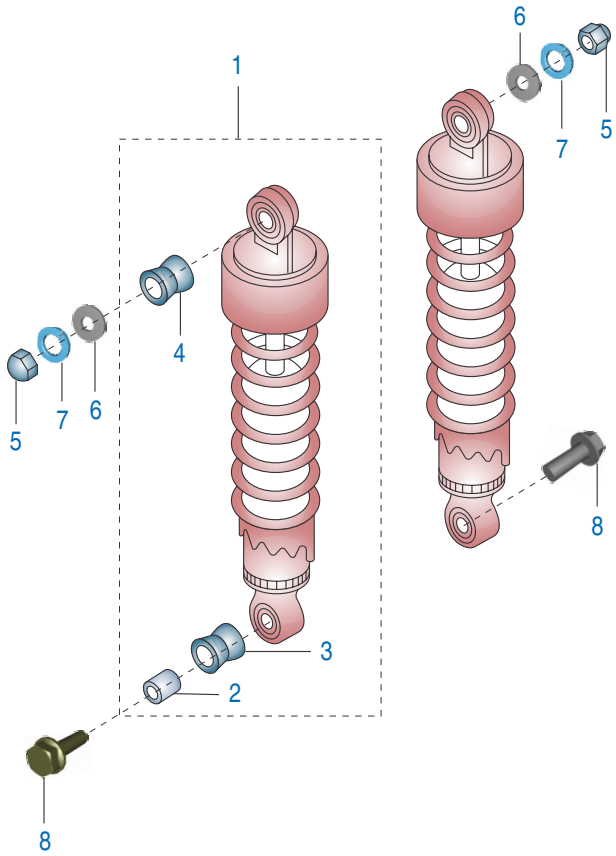

Plate No.: 27

Rear Shock Absorber

No.	Part No.	Description	Cruise Qty.	Street Qty.	Remarks
1	DV 1710 01	Rear Shock Absorber	2	–	
	PD 1220 05	Rear Shock Absorber	–	2	
2	DG 1710 35	Collar, shock Absorber	2	2	
3	DG 1710 37	Damper, Lower	2	2	
4	DG 1710 36	Damper, Upper	2	2	
5	39 2366 15	Nut cap	2	2	
6	DG 1710 25	Washer	2	2	
7	39 1829 12	Spring Washer	2	2	
8	DG 1710 38	Bolt Flanged	2	2	

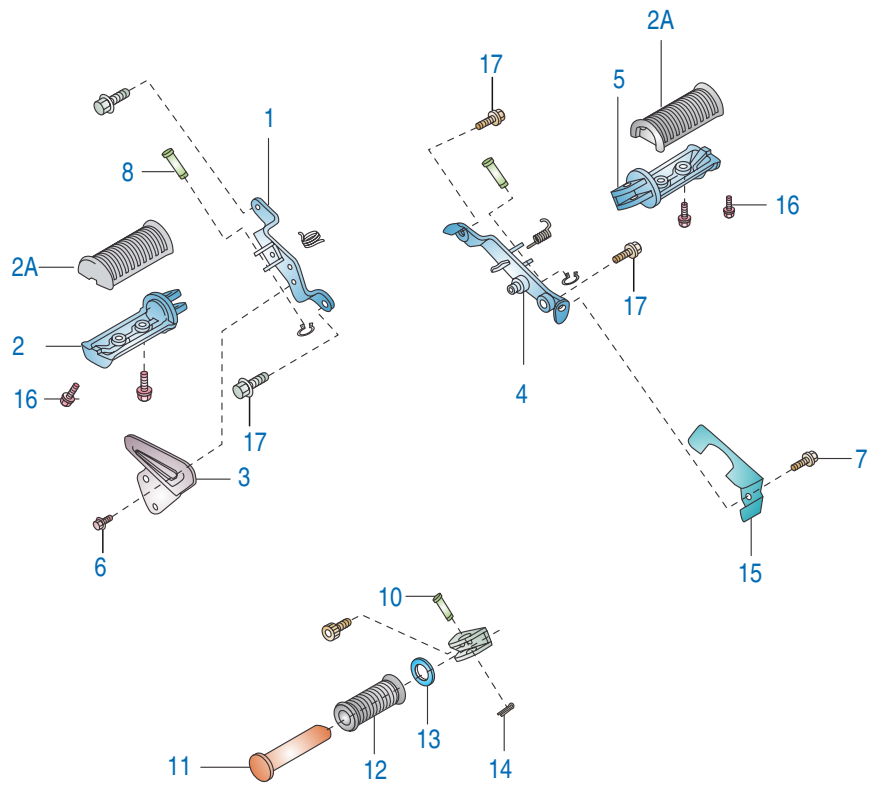

Plate No.: 28

Foot Rest

No.	Part No.	Description	Cruise Qty.	Street Qty.	Remarks
1	DV 1610 46	Holder Step Front LH	1	1	
2	PD 1130 00	Footrest Rider LH - Avenger	1	1	
2A	PD 1130 03	Rubber Rider Step	2	2	
3	PD 2312 06	Guard Step LH	1	1	
4	JM 1610 37	Assly Stay RH	1	1	
5	PD 1130 01	Footrest Rider RH - Avenger	1	1	
6	39 1954 04	Bolt	2	2	
7	DG 1611 53	Bolt socket	2	2	
8	DG 1611 45	Pin	2	2	
10	30 1710 22	Pin	2	2	
11	PD 1130 02	Step Rubber Rear	2	2	
12	PD 1130 04	Rubber Pillion Step	2	2	
13	DG 1611 50	Washer	2	2	
14	39 0146 08	Split Pin	2	2	
15	PD 2312 05	Guard Brake Pedal	1	1	
16	KA CF06 12	Bolt	4	4	
17	39 1956 04	Bolt	4	4	

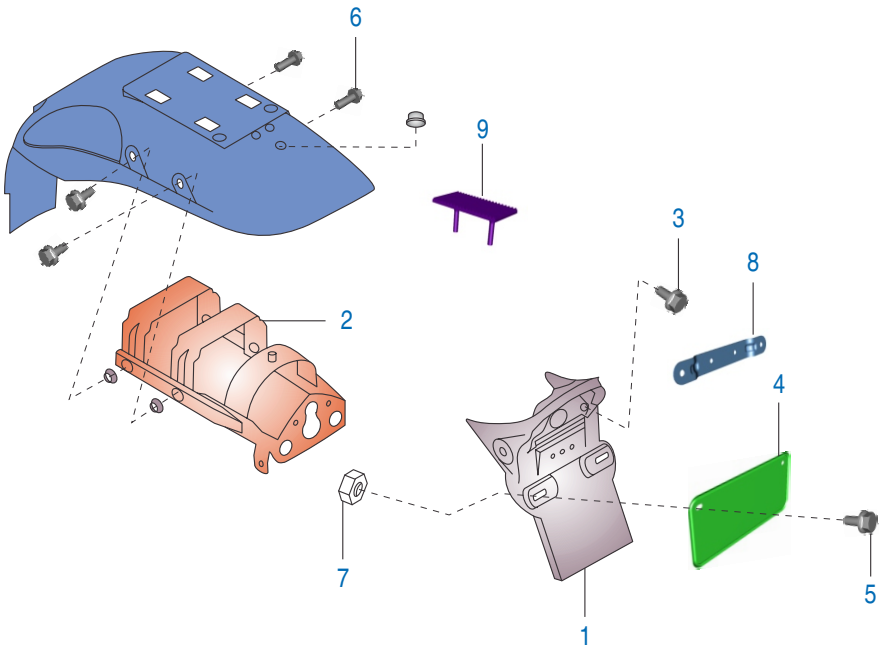

Plate No.: 29

Mudguard - Front & Rear

No.	Part No.	Description	Cruise Qty.	Street Qty.	Remarks
1	DG 1612 67	Flap	1	1	
2	DG 1612 06	Stay rear fender	1	1	
3	DG 1611 10	Bolt	2	2	
4	DP 1611 45	Number Plate	1	1	
5	39 1943 04	Hex. head Bolt	2	2	
6	DG 1611 13	Bolt	4	4	
7	KC GA06 06	Hex. Nut	2	2	
8	DZ 1612 65	Bkt. Rear Number Plate	1	1	
9	PD 1814 01	Damper Rear Mud Guard	1	1	

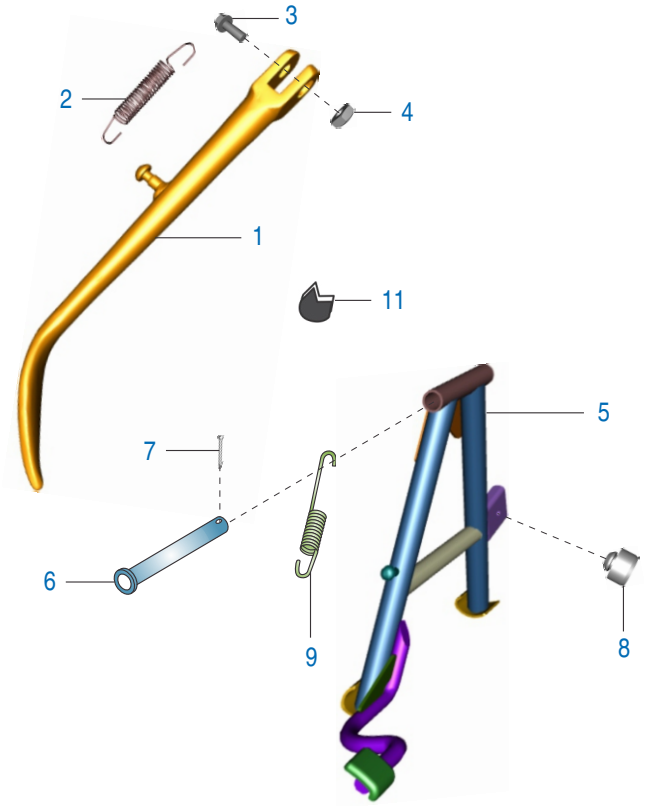

Plate No.: 30

Stand

No.	Part No.	Description	Cruise Qty.	Street Qty.	Remarks
1	DV 1610 17	Side Stand	1	1	
2	DG 1612 19	Spring	1	1	
3	DG 1611 29	Bolt	1	1	
4	DD 1610 71	Lock Nut	1	1	
5	DV 1610 33	Stand Centre	1	1	
6	DG 1612 30	Shaft Stand	1	1	
7	39 0797 08	Pin Cotter	1	1	
8	DG 1611 24	Damper	1	1	
9	DV 1610 60	Spring	1	1	
10	39 2423 11	Plain washer	1	1	
11	DG 1612 76	Damper Side Stand	1	1	

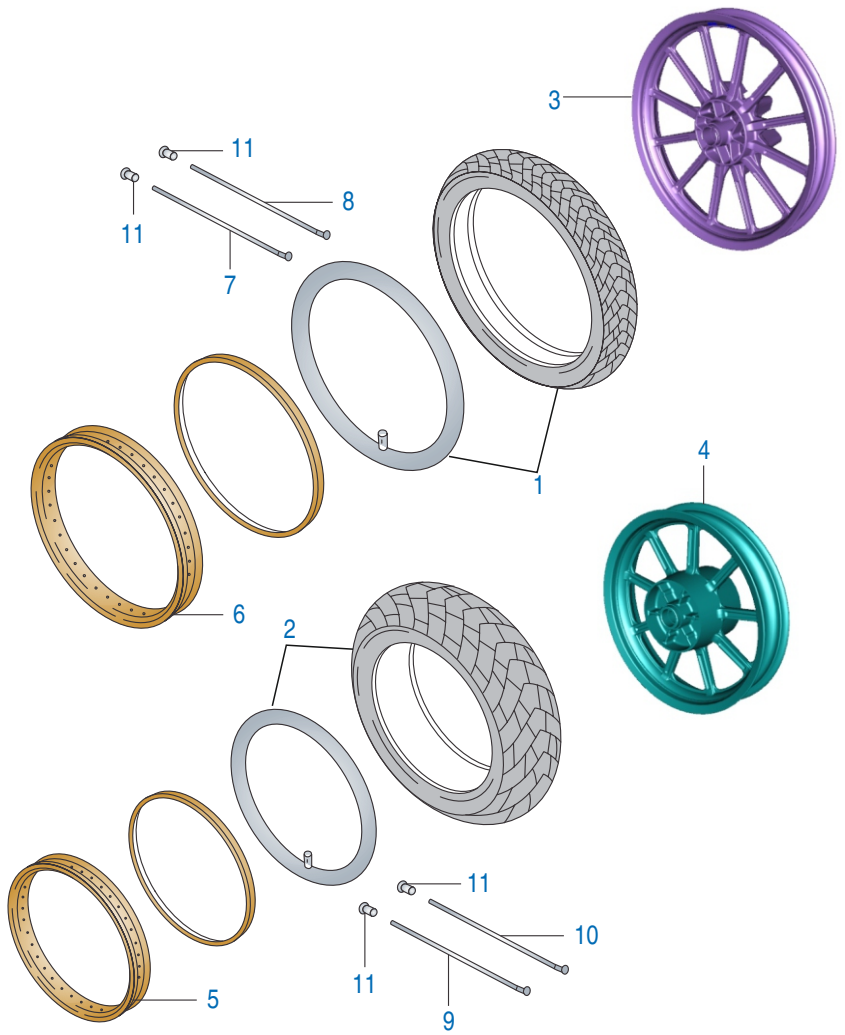

Plate No.: 31

Tyre, Tube & Wheel Rim

No.	Part No.	Description	Cruise Qty.	Street Qty.	Remarks
1	DG 1511 00	Tyre Assly Front	1	1	
2	DG 1510 69	Tyre Assly Rear	1	1	
3	PD 1310 07	Wheel Front 1.85X17	–	1	
4	PD 1312 18	Wheel Rear 2.50X15	–	1	
5	DG 1510 94	Rim Rear	1	–	
6	DG 1510 93	Rim Front	1	–	
7	DG 1510 25	Spoke Inner Front	18	–	
8	DG 1510 75	Spoke Inner Rear	18	–	
9	DG 1510 26	Spoke Outer Front	18	–	
10	DG 1510 76	Spoke Outer Rear	18	–	
11	16 1510 66	Nipple Spoke	72	–	

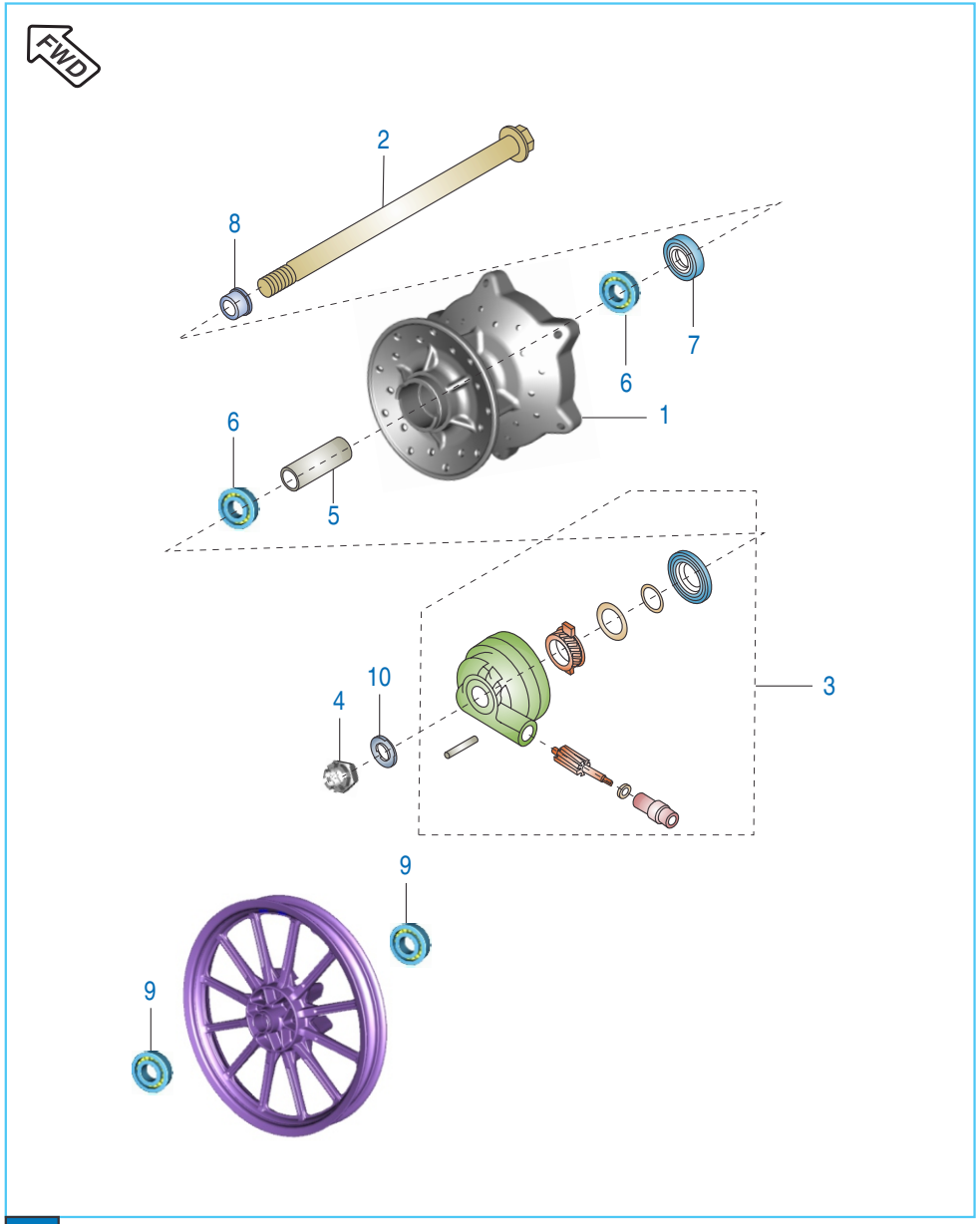

Plate No.: 32

Front Hub

No.	Part No.	Description	Cruise Qty.	Street Qty.	Remarks
1	DG 1510 03	Drum Front Brake	1	–	
2	DG 1510 06	Axle, Front	1	1	
3	JC 1510 20	Case Meter Housing W/O Sensor	1	1	
4	DH 1710 19	Nut	1	1	
5	DV 1510 07	Collar Assembly	1	1	
6	39 2241 20	Ball Bearing	2	–	
7	DG 1510 05	Seal oil	1	1	
8	DG 1510 07	Collar Front Axle	1	1	
9	KP BC62 02	Ball Bearing	–	2	
10	DG 1510 08	Washer	1	1	

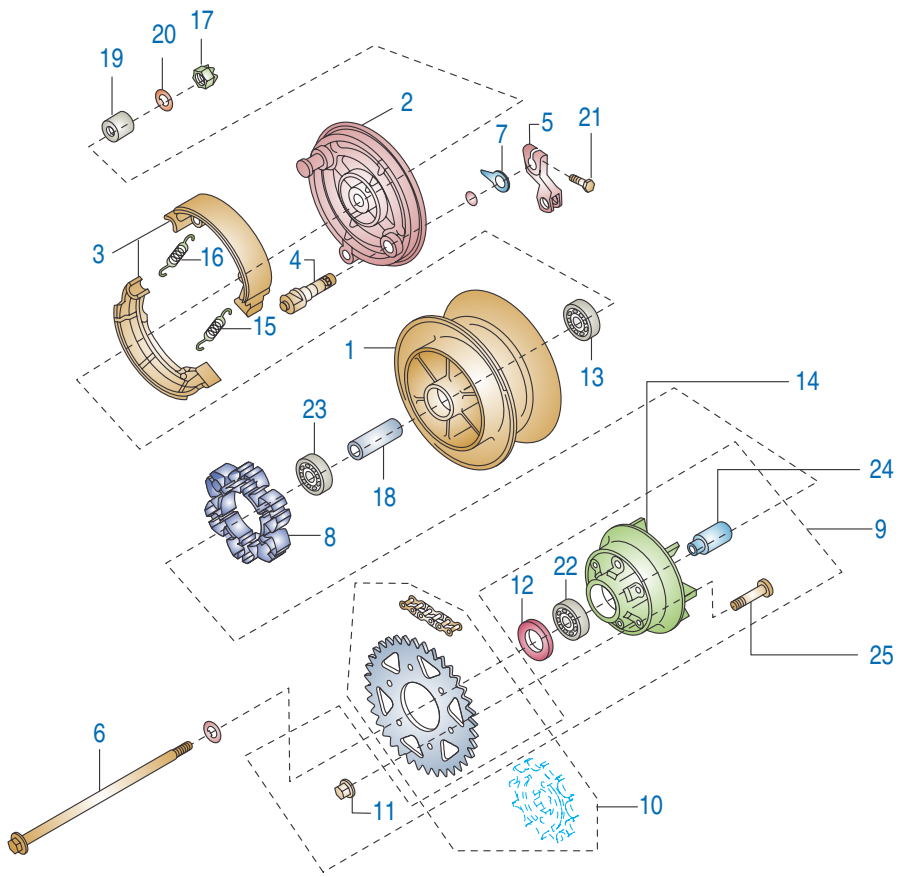

Plate No.: 33

Rear Hub-Spoke (Cruise)

No.	Part No.	Description	Cruise Qty.	Street Qty.	Remarks
1	DG 1510 84	Drum Rear Brake	1	–	
2	DG 1510 81	Panel Assly Brake Rear	1	–	
3	36 PD00 59	Kit Brake Shoe Non Asbestos	1	–	
4	DG 1510 59	Cam Brake	1	–	
5	DG 1510 60	Lever Brake Cam	1	–	
6	JM 1510 05	Axle Rear	1	–	
7	30 1510 05	Indicator Brake Shoe	1	–	
8	30 1510 76	Damper Rear Hub Shock	1	–	
9	PD 1312 01	Coupling Assly Rear Hub	1	–	
10	36 PD00 21	Chain - Sprocket - Kit	1	--	Ref. Page No. 109
11	DV 1510 06	Nut Flanged lock	6	–	
12	30 1510 82	Seal Oil	1	–	
13	39 2242 20	Bearing Ball	1	–	
14	DV 1510 05	Coupling	1	–	
15	DG 1510 58	Spring Brake Shoe	1	–	
16	30 1510 69	Spring Brake Shoe	1	–	
17	DH 1710 19	Nut	1	–	
18	DG 1510 62	Collar Rear Brake Drum	1	–	
19	DG 1510 62	Collar Rear Axle	1	–	
20	DG 1510 08	Washer	2	–	
21	39 1916 04	Bolt Upset	1	–	
22	39 2240 20	Bearing Ball	1	–	
23	39 2241 20	Bearing Ball	1	–	
24	DG 1510 65	Sleeve	1	–	
25	DG 1510 68	Bolt	6	–	

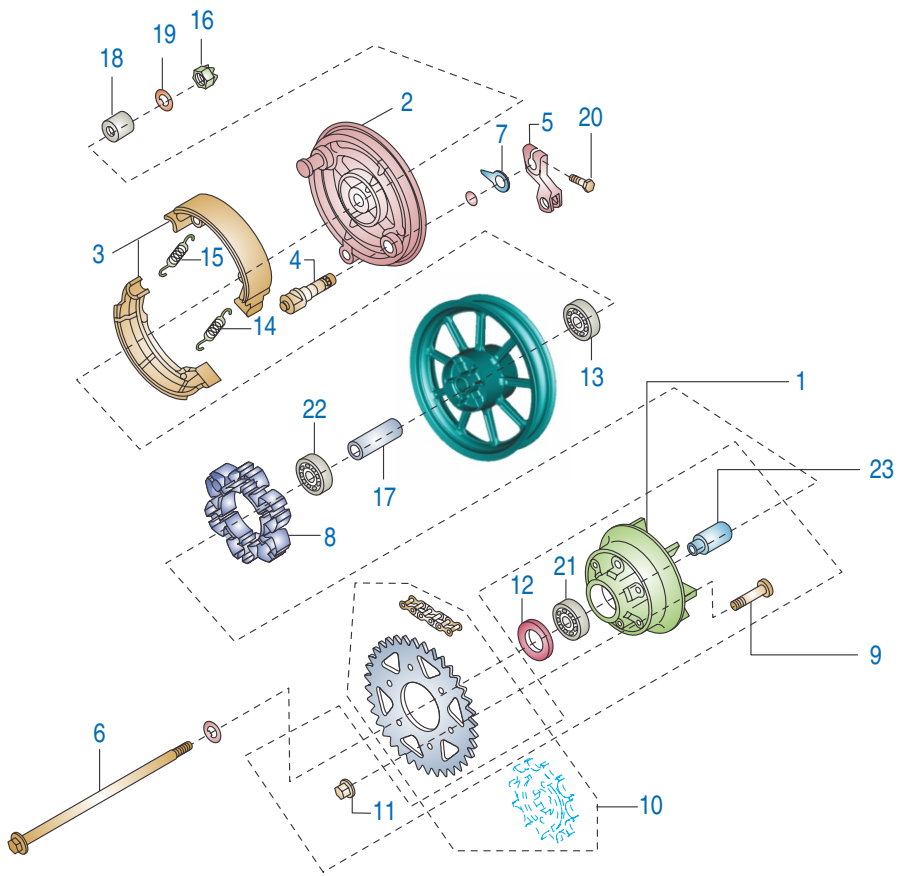

Plate No.: 34

Rear Hub-Alloy Wheel (Street)

No.	Part No.	Description	Cruise Qty.	Street Qty.	Remarks
1	PD 1312 12	Coupling	–	1	
2	PD 1318 17	Assly Brake Panel	--	1	Non Asbestos
3	36 PD00 59	Kit Brake Shoe Non Asbestos	–	1	
4	DG 1510 59	Cam Brake	–	1	
5	DG 1510 60	Lever Brake Cam	–	1	
6	JM 1510 05	Axle Rear	–	1	
7	30 1510 05	Indicator Brake Shoe	–	1	
8	30 1510 76	Damper Rear Hub Shock	–	1	
9	DG 1510 68	Bolt	–	6	
10	36 PD00 21	Chain - Sprocket - Kit	–	1	Ref. Page No. 109
11	DV 1510 06	Nut Flanged lock	–	6	
12	30 1510 82	Seal Oil	–	1	
13	KP BC62 02	Bearing Ball	--	1	
14	DG 1510 58	Spring Brake Shoe	–	1	
15	30 1510 69	Spring Brake Shoe	–	1	
16	DH 1710 19	Nut	–	1	
17	DG 1510 85	Collar Rear Brake Drum	–	1	
18	DG 1510 62	Collar Rear Axle	--	1	
19	DG 1510 08	Washer	–	2	
20	39 1069 01	Screw	–	1	
21	KP BC60 04	Bearing Ball	–	1	
22	KP BC63 02	Bearing Ball	–	1	
23	DG 1510 65	Sleeve	–	1	

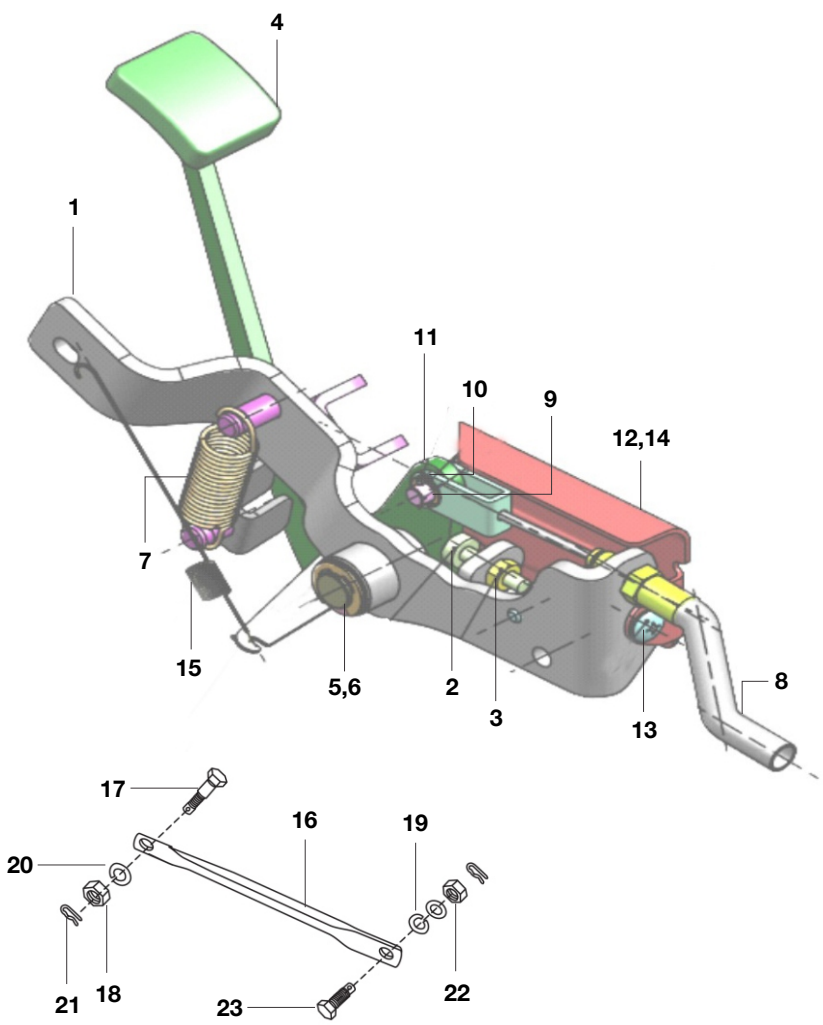

Plate No.: 35

Rear Brake Pedal

No.	Part No.	Description	Cruise Qty.	Street Qty.	Remarks
1	JM 1610 37	Stay RH assly.	1	1	
2	KA AC06 30	Hexagon head bolt M6X1	1	1	
3	39 0292 15	Hexagon Nut-M6X1	1	1	
4	JM 1910 11	Lever Brake	1	1	
5	39 0805 11	Washer	1	1	
6	LE C000 01	Circlip E type	1	1	
7	JM 1910 12	Spring	1	1	
8	JM 1910 13	Rear brake cable	1	1	
9	DG 1910 51	Pin	1	1	
10	39 1211 11	Washer	1	1	
11	39 0146 08	Slip Pin	1	1	
12	JM 1910 15	Guard Brake pedal	1	–	
	PD 2312 05	Guard Brake pedal	–	1	
13	KB UA06 12	Mushroom Head screw - M6-L12	1	1	
14	LB U000 08	Mushroom Head screw - M6-L40	1	1	
15	JM 1910 14	Spring Brake Switch	1	1	
16	PD 1220 03	Torque Rod	1	1	N.I
17	PD 1220 04	Bolt Torque Rod	1	1	N.I
18	39 0694 15	Nut	1	1	N.I
19	39 0789 12	Washer Spring	1	1	N.I
20	39 1540 11	Washer Plain	2	2	N.I
21	39 0807 08	Pin Snap	2	2	
22	39 1225 15	Hex Nut	1	1	
23	DG 1910 48	Bolt	1	1	

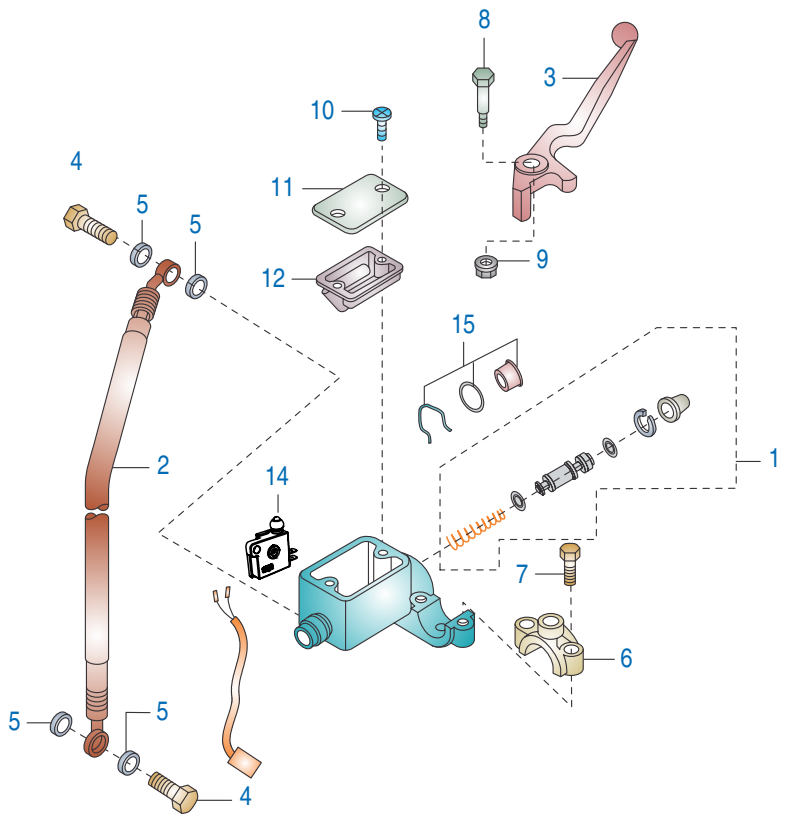

Plate No.: 36

Front Master Cylinder

No.	Part No.	Description	Cruise Qty.	Street Qty.	Remarks
1	36 PD00 37	Major Kit - Master Cylinder	1	1	
2	36 PD00 35	Hose Brake Front	1	–	
	PD 1318 08	Hose Brake Front	–	1	
3	36 PD00 41	Lever Grip RH	1	–	
	DV 1910 07	Lever Grip RH	-	1	
4	36 PD00 36	Banjo Bolt	2	2	
5	DE 1910 10	Washer Copper	4	4	
6	DE 1910 33	Clamp Holder RH	1	1	
7	DE 1910 34	Bolt	2	2	
8	DE 1910 31	Bolt Front Brake Lever	1	1	
9	DE 1910 32	Nut Flanged	1	1	
10	DE 1910 30	Screw	2	2	
11	DE 1910 29	Reservoir Cover	1	1	
12	DE 1910 28	Diaphragm	1	1	
13	DE 1910 27	Cover Seal Master Cylinder (Boot)	1	1	N.I.
14	DJ 2011 09	Front brake switch	1	–	
	DJ 2011 00	Front brake switch	–	1	
15	DE 1910 35	Oil Window Kit	1	1	(Window / 'O' ring / Clip)
16	PD 1318 16	Master Cylinder	1	–	
	DE 1510 15	Master Cylinder	–	1	
17	36 PD00 38	Kit Mirror Master cylinder	1	1	

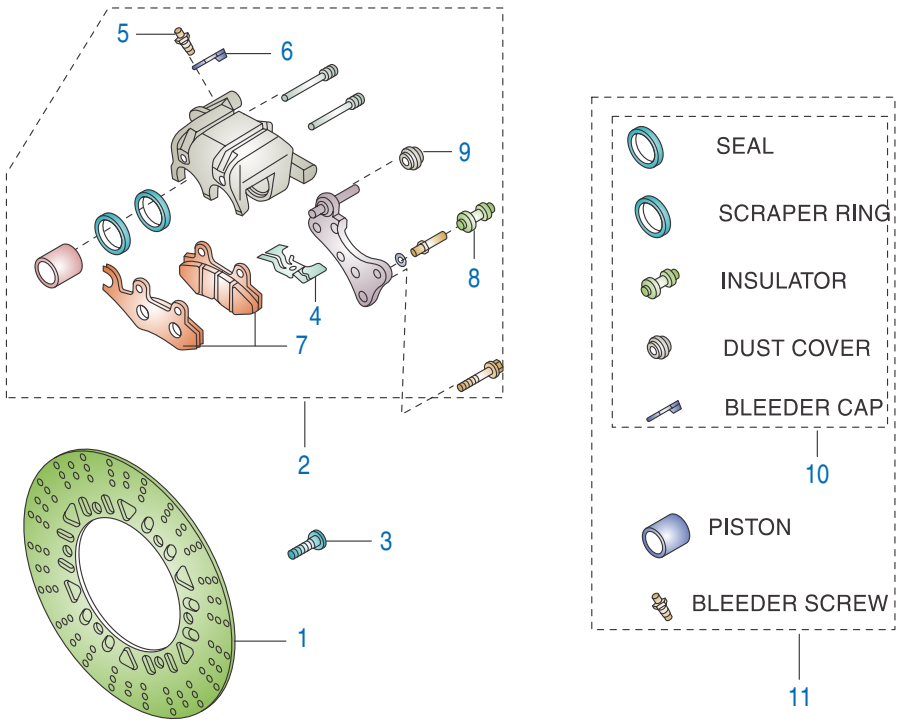

Plate No.: 37

Front Brake-Caliper & Disc

No.	Part No.	Description	Cruise Qty.	Street Qty.	Remarks
1	DG 1511 02	Disc, Front	1	–	
	DG 1510 28	Disc, Front	–	1	
2	DG 1510 89	Caliper Assly. Front	1	–	
	PD 1318 13	Caliper Assly. Front	–	1	
3	PD 1318 03	Bolt, Disc Plate	6	6	
4	DE 1510 48	Spring Pad	1	1	
5	DE 1510 46	Bleeder Screw	1	1	
6	DE 1510 47	Bleeder Cap	1	1	
7	DE 1510 37	Disc Pad Set	1	1	
8	DE 1510 43	Insulator	1	1	
9	DE 1510 45	Dust cover	1	1	
10	36 DK00 65	Minor Kit - Caliper	1	1	
11	36 DK00 66	Major Kit - Caliper	1	1	
12	36 PD00 44	Kit Cal Assly (ø28x2)-pad Pin	1	1	
13	36 PD00 45	Kit Caliper Bracket	1	1	

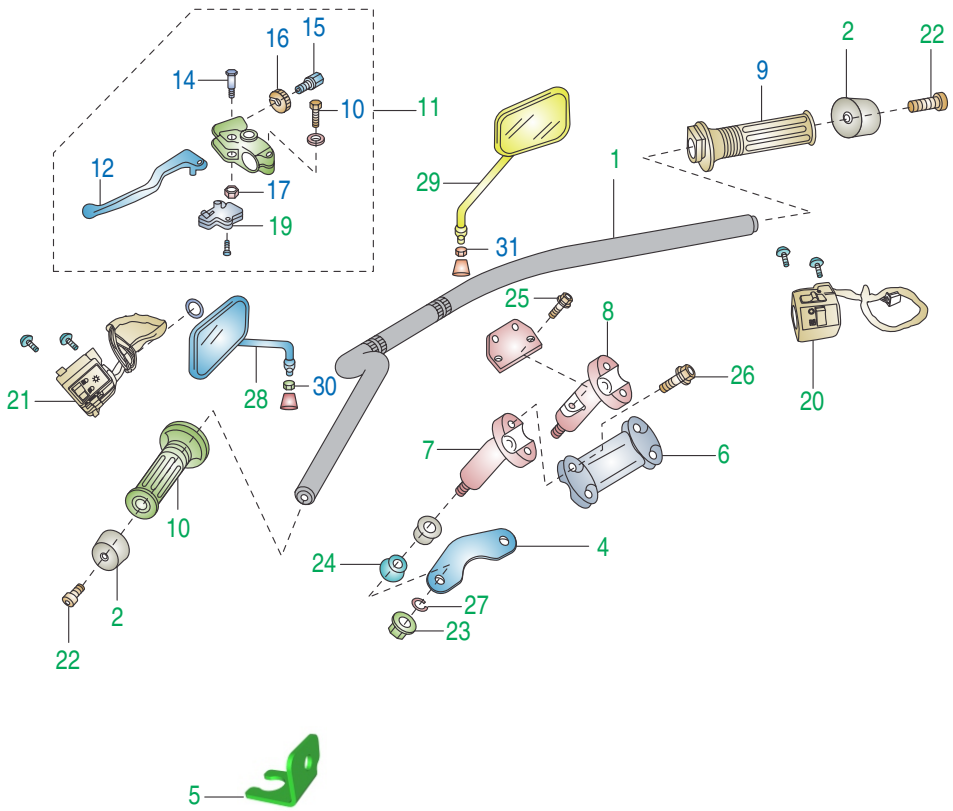

Plate No.: 38

Handle Bar

No.	Part No.	Description	Cruise Qty.	Street Qty.	Remarks
1	PD 1510 07	Handle	1	–	
	PD 1510 00	Handle	–	1	
2	PD 1510 09	Weight, Handle	2	–	
	DJ 1810 11	Weight, Handle	–	2	
3	DV 1810 08	Plate	1	1	
4	DG 1810 91	Holder Fork Upper	1	–	
	PD 1510 03	Upper Bracket	–	1	
5	PD 1138 03	Bracket Speedo Cable	1	1	
6	DG 1810 67	Holder Handle Upper	1	–	
	PD 1510 01	Holder Handle Upper	–	1	
7	DG 1810 70	Holder Handle Lower LH	1	–	
	PD 1510 04	Holder Handle Lower LH	–	1	
8	DG 1810 71	Holder Handle Lower RH	1	–	
	PD 1510 05	Holder Handle Lower RH	–	1	
9	PD 1610 04	Grip RH	1	1	
10	PD 1610 01	Grip LH	1	1	
11	PD 1610 05	Lever Assly. Grip Clutch LH	1	–	
	DG 1910 10	Lever Assly. Grip Clutch LH	–	1	
12	DG 1910 12	Lever Grip	1	1	
13	JM 1910 10	Lever Boot - Clutch Lever	1	1	N.I.
14	LA A000 26	Bolt Clutch Lever	1	–	
	DG 1910 13	Bolt Clutch Lever	--	1	
15	30 1910 24	Screw cable Adjust	1	1	
16	30 1910 17	Nut Cable Adjust Lock	1	1	
17	DG 1910 14	Nut Lock	1	1	

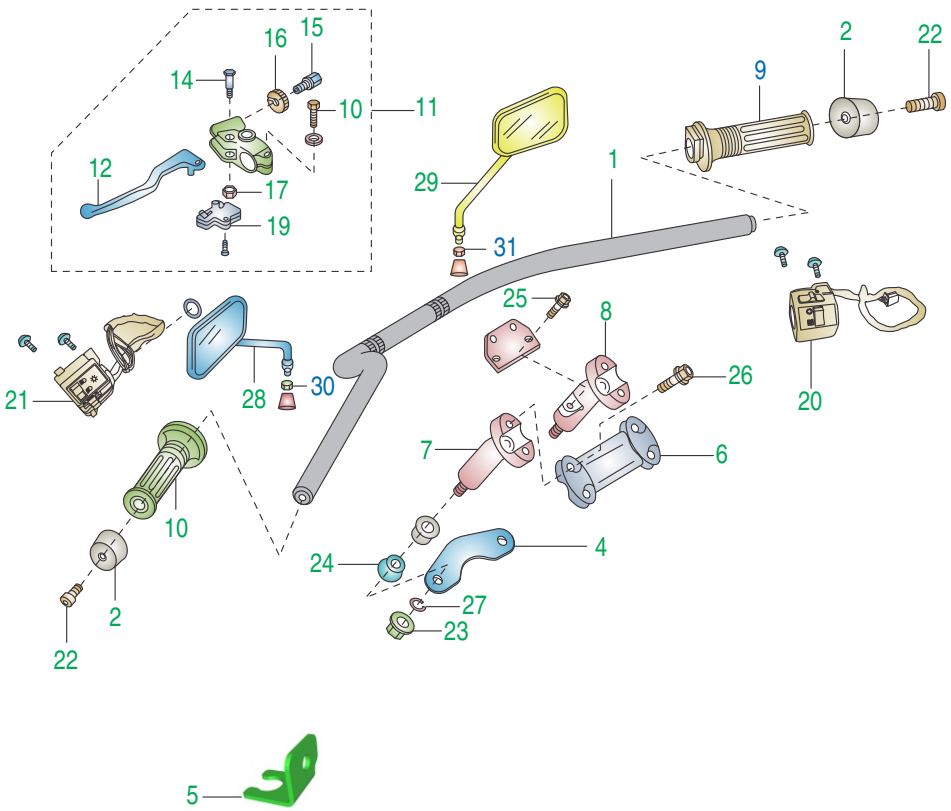

Plate No.: 38

Handle Bar

No.	Part No.	Description	Cruise Qty.	Street Qty.	Remarks
18	KA DA06 22	Bolt Flange	1	1	
19	DG 2010 30	Clutch Switch	1	1	
20	PD 4014 11	Control Switch RH	1	–	
	PD 4014 01	Control Switch RH	--	1	
21	PD 4014 10	Control Switch LH	1	–	
	PD 4014 04	Control Switch LH	–	1	
22	39 2427 04	Allen key bolt	2	2	
23	DG 1810 87	Nut Cap	2	2	
24	DG 1810 54	Damper	4	4	
25	39 1944 04	Bolt Flanged small	2	2	
26	59 0400 48	Bolt Flanged small	4	4	
27	39 0789 12	Washer spring	2	2	
28	PD 2316 02	Mirror Assly LH	1	–	
	PD 2316 04	Mirror Assly LH	–	1	
29	PD 2316 03	Mirror Assly RH	1	–	
	PD 2316 05	Mirror Assly RH	–	1	
30	JM 2210 05	Nut Mirror LH	1	1	
31	JM 2210 06	Nut Mirror RH	1	1	

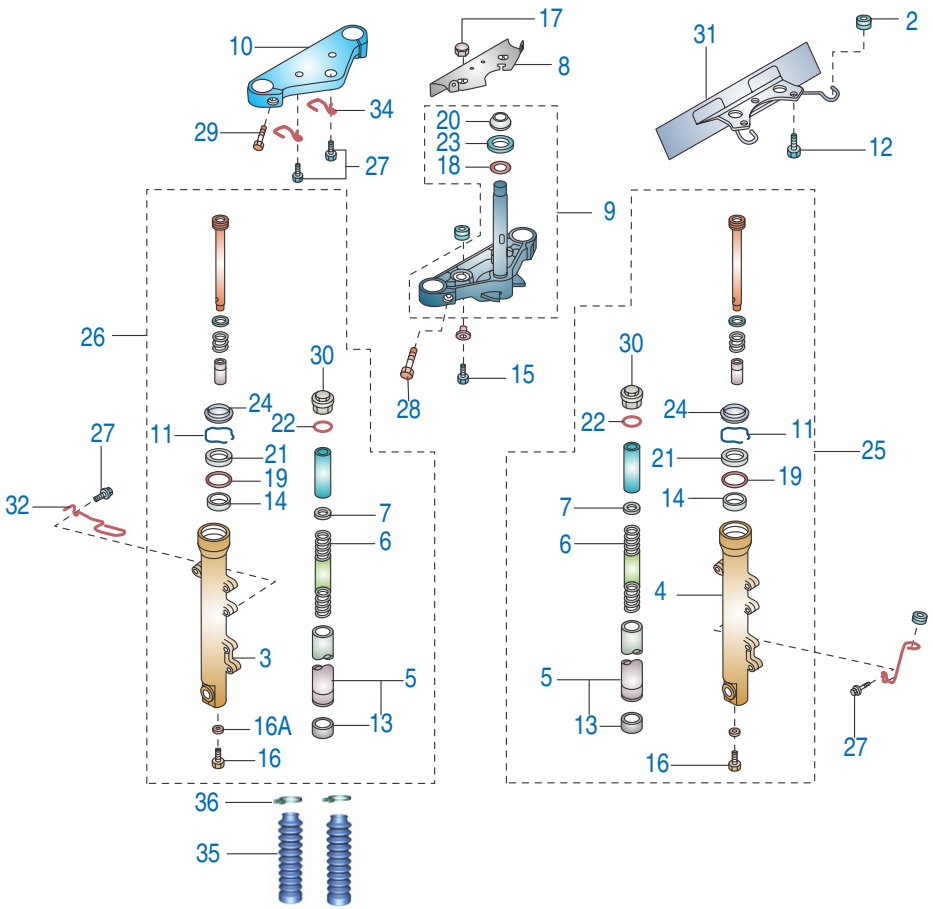

Plate No.: 39

Front Fork

No.	Part No.	Description	Cruise Qty.	Street Qty.	Remarks
1	PD 1210 17	Front Fork	1	–	
	PD 1210 07	Front Fork	–	1	
2	DG 1810 34	Clamp Rubber	2	2	
3	DG 1810 12	Pipe - Left Fork Outer	1	–	
	PD 1210 09	Tube Outer LH	–	1	
4	DG 1810 89	Pipe - Right Fork Outer	1	–	
	PD 1210 10	Tube Outer LH	--	1	
5	DG 1810 10	Fork Pipe Inner	2	2	
6	DG 1810 14	Spring Front Fork	2	2	
7	DG 1810 15	Seat Fork Spring	2	2	
8	PD 1812 16	Bracket Fork Cover	--	1	
	DV 1810 15	Bracket Fork Cover	1	–	
9	PD 1210 16	Under Bracket Assly	1	–	
	PD 1210 15	Under Bracket Assly	–	1	
10	DG 1810 91	Holder Fork Upper	1	–	
	PD 1510 03	Holder Fork Upper	–	1	
11	DG 1810 22	Ring - Snap	2	2	
12	39 1943 04	Bolt Flange	3	3	
13	DG 1810 11	Bushing - Front Fork, Inner Pipe	2	2	
14	DG 1810 13	Bushing - Front Fork, Outer Tube	2	2	
15	39 1956 04	Bolt Flanged small	2	2	
16	KA CF08 30	Bolt, Fork Cylinder	2	2	
16A	30 1810 26	Gasket	2	2	
17	39 0963 15	Nut, Cap	2	2	
18	DG 1810 03	Washer	1	1	
19	DG 1810 24	Spacer	2	2	

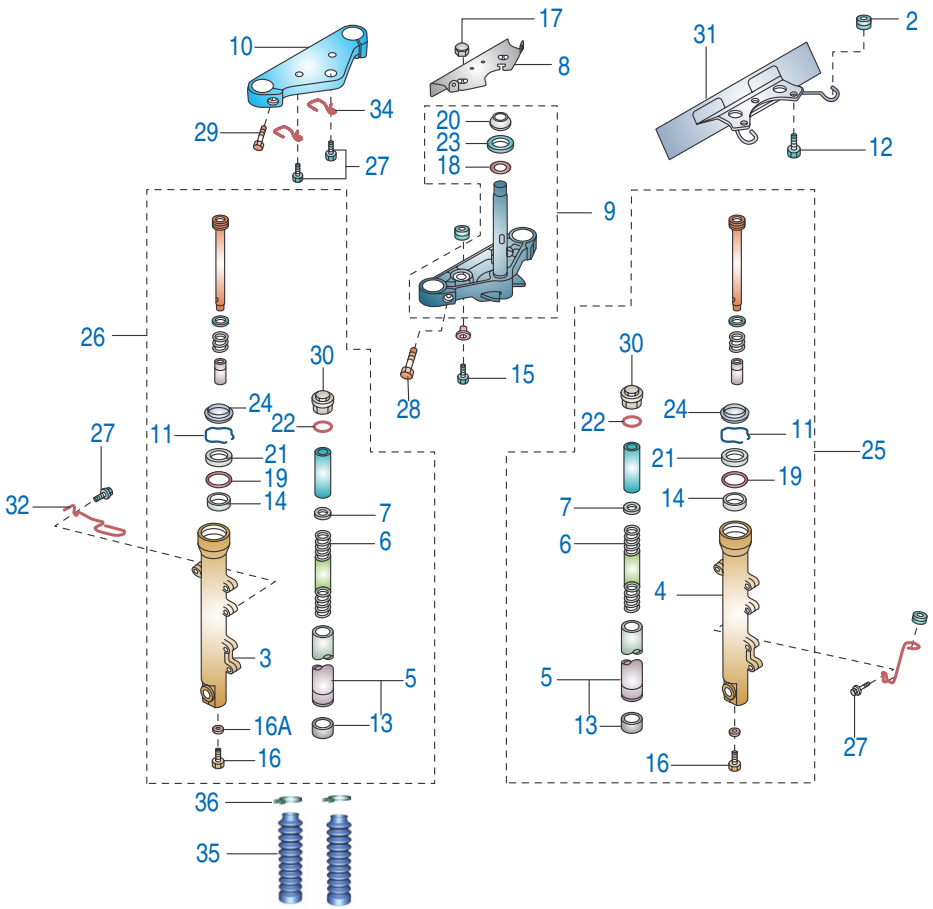

Plate No.: 39

Front Fork

No.	Part No.	Description	Cruise Qty.	Street Qty.	Remarks
20	DG 1810 05	Bearing Cone	1	1	
21	DG 1810 23	Seal Oil, Fork Outer Tube	2	2	
22	DG 1810 26	Ring 'O' Fork Top	2	2	
23	DG 1810 04	Seal Oil, Steering Stem	1	1	
24	DG 1810 21	Seal, Fork Outer Tube	2	2	
25	DG 1810 88	Damper (Leg) Assly. RH	1	–	
	PD 1210 12	Leg Assly. RH	–	1	
26	DG 1810 09	Damper (Leg) Assly. LH	1	–	
	PD 1210 11	Leg Assly. LH	–	1	
27	KA EA06 22	Bolt	4	4	
28	DG 1810 06	Bolt Socket	2	2	
29	DG 1810 08	Bolt	2	2	
30	59 0400 05	Bolt Fork Top	2	2	
31	DP 1611 44	Plate Number Front	1	1	
32	DG 2010 12	Clamp S' cable clamp	1	1	
34	DG 1810 40	Clamp	2	2	
35	PD 1210 06	Bellow	–	2	
36	PD 1210 14	Clamp Bellow	--	2	

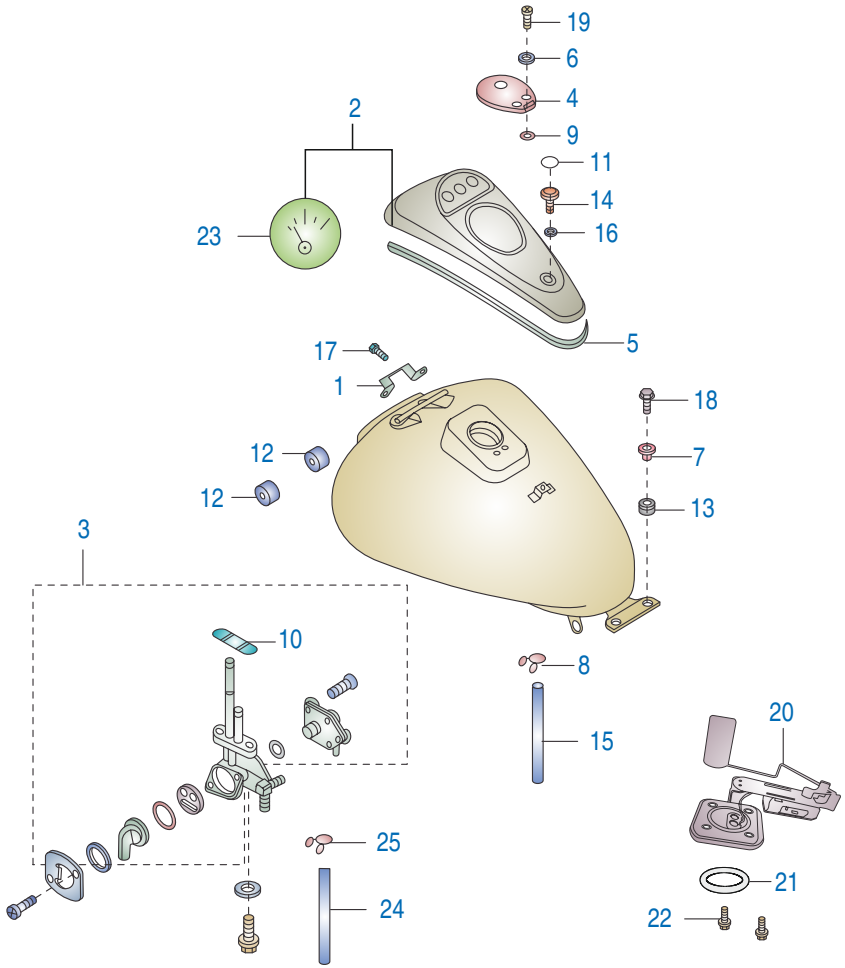

Plate No.: 40

Fuel Tank

No.	Part No.	Description	Cruise Qty.	Street Qty.	Remarks
1	DG 1410 20	Bracket Fuel Tank Cover	1	1	
2	52 PD00 87	Cover Assly. Fuel Tank	1	–	
	52 PD01 17	Cover Assly. Fuel Tank	–	1	
3	DJ 1410 56	Fuel Cock Assly.	1	1	
4	PD 1716 07	Cap Tank Fuel	1	–	
	PD 1716 12	Cap Tank Fuel	–	1	
5	DG 1410 59	Trim	1	1	
6	39 2179 24	Washer	2	2	
7	PD 1710 03	Collar	2	2	
8	DG 1410 28	Clamp	1	1	
9	30 1410 31	Ring 'O'	2	2	
10	30 1410 39	Ring 'O' Fuel Tap Packing	1	1	
11	DG 1410 24	Plug	2	2	
12	DF 1411 28	Damper Fuel Tank	2	2	
13	DG 1410 19	Damper	2	2	
14	DG 1410 26	Bolt	2	2	
15	DG 1410 29	Tube	1	1	
16	DG 1410 27	Washer	2	2	
17	39 1902 04	Bolt Flanged	2	2	
18	39 1913 04	Bolt Flanged	2	2	
19	39 0761 01	Screw Pan Cross	2	2	
20	PD 4026 04	Fuel gauge sender	1	1	

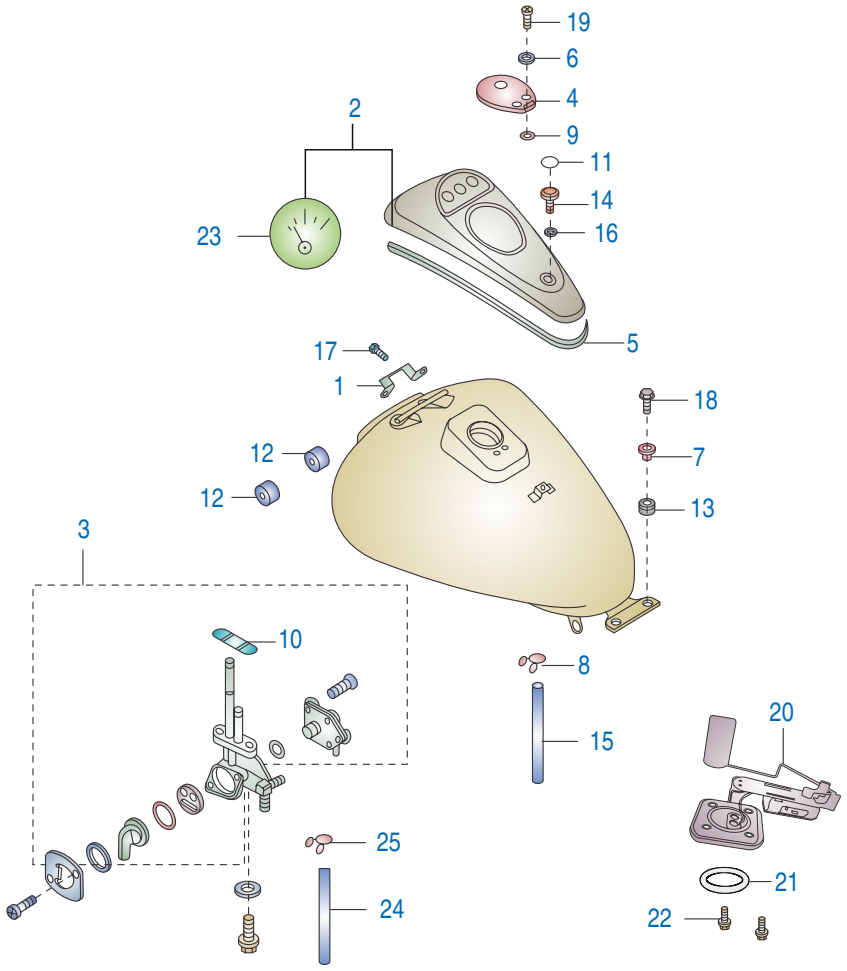

Plate No.: 40

Fuel Tank

No.	Part No.	Description	Cruise Qty.	Street Qty.	Remarks
21	30 1410 31	Gasket Tank Unit	1	1	
22	30 1410 32	Bolt for tank Unit	4	4	
23	PD 4026 06	Fuel gauge (Meter)	1	1	
24	DJ 1410 06	Fuel Cock Tube	1	1	
25	DK 1410 41	Clip for Tube	1	1	

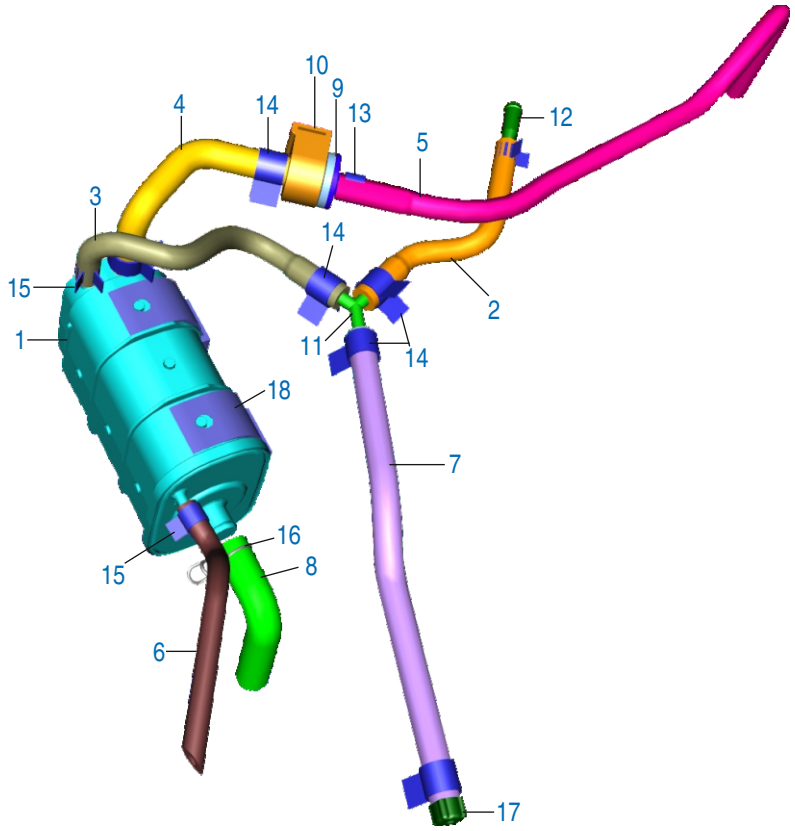

Plate No.: 41

Canister Assembly

No.	Part No.	Description	Cruise Qty.	Street Qty.	Remarks
1	JY 1710 77	Canister	1	1	
2	PD 1716 03	Tube Inline Conntr To Y Conntr	1	1	
3	PD 1716 04	Tube Y Connector To Canister	1	1	
4	PD 1716 05	Tube Canister To Purge Valve	1	1	
5	PD 1716 06	Tube Purge Valve To Carburetor	1	1	
6	JH 1710 25	Tube Canister Drain	1	1	
7	PD 1716 11	Tube Y To Drain	1	1	
8	PD 1716 09	Tube Canister Breather	1	1	
9	PD 1716 16	Valve Purge	1	1	
10	JH 1710 48	Grommet Purge Valve	1	1	
11	JY 1138 42	Connector Y Shape	1	1	
12	JG 1710 86	Connector Tube Evap	1	1	
13	JG 1710 29	Spring Band Clamp 11.5 X 8.4	1	1	
14	JY 1710 90	Spring Band Clamp 13x12	5	5	
15	JY 1710 70	Spring Band Clamp 9 X8.4	3	3	
16	DG 1210 40	Clamp	1	1	
17	JY 1718 25	Plug Fuel Drain	1	1	
18	JZ 1710 55	Strap Canister	2	2	

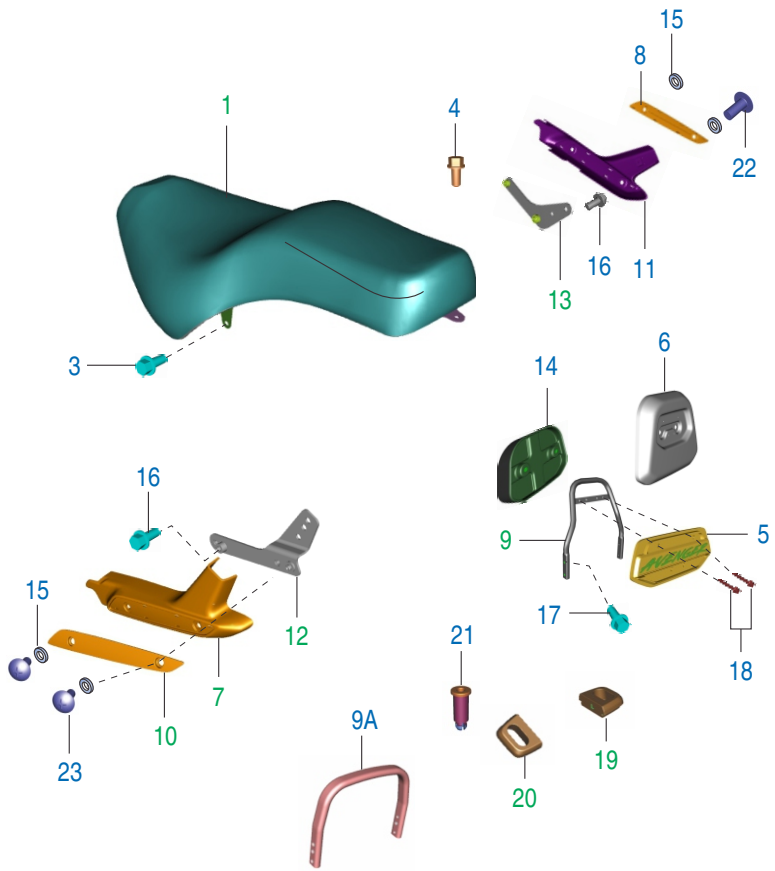

Plate No.: 42

Seat / Grip Frame Rear / Cover Grip Frame

No.	Part No.	Description	Cruise Qty.	Street Qty.	Remarks
1	PD 1910 00	Seat Assly.	1	–	
	PD 1910 02	Seat Assly.	–	1	
2	PD 1910 01	Washer Nylon	1	1	
3	39 1942 04	Bolt Flanged	2	2	
4	39 1943 04	Bolt Flanged Small	1	1	
5	PD 2314 10	Emblem Back Rest	1	–	
6	PD 2314 07	Cover, Pad	1	–	
7	PD 1812 04	Cover Grab Rear LH	1	–	
	PD 1812 12	Cover Grab Rear LH	–	1	
8	PD 2314 09	Side Plate Grip RH	1	–	
	PD 1812 15	Side Plate Grip RH	–	1	
9	PD 2314 00	Grab Rear	1	–	
9A	PD 2314 01	Grab Rear	–	1	
10	PD 2314 08	Side Plate Grip LH	1	–	
	PD 1812 14	Side Plate Grip LH	–	1	
11	PD 1812 05	Cover Grip Rear RH	1	–	
	PD 1812 13	Cover Grip Rear RH	–	1	
12	PD 2314 02	Grip frame LH	1	1	
13	PD 2314 03	Grip frame RH	1	1	
14	DG 2210 27	Pad seat	1	–	
15	KD BA06 13	Washer Plain	4	4	
16	59 0400 48	Bolt flanged Small	4	4	
17	39 1956 04	Bolt flanged	4	4	
18	DG 2210 41	Screw emblem	2	–	
19	PD 2314 11	Cap Grab Rail RH	1	1	
20	PD 2314 04	Cap Grab Rail LH	1	1	
21	PD 2314 12	Nail	4	4	
22	KB UA06 16	Screw Truss	4	–	
	KB UF06 14	Screw Truss	–	4	

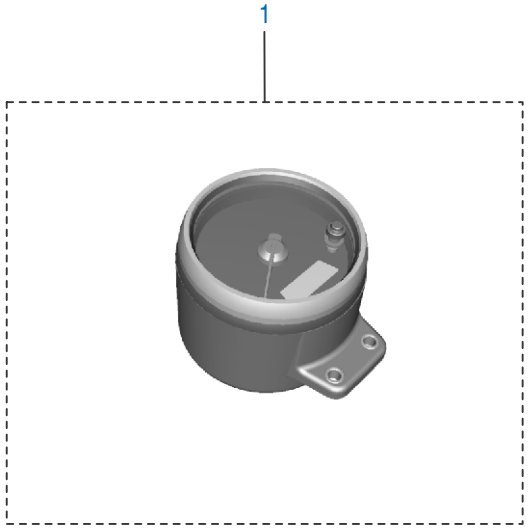

Plate No.: 43

Speedometer

No.	Part No.	Description	Cruise Qty.	Street Qty.	Remarks
1	PD 4024 01	Meter Assly.	1	–	
	PD 4024 05	Meter Assly.	–	1	
2	DV 1810 08	Bracket Speedo	1	1	N.I.
3	39 1944 04	Bolt	2	2	N.I.

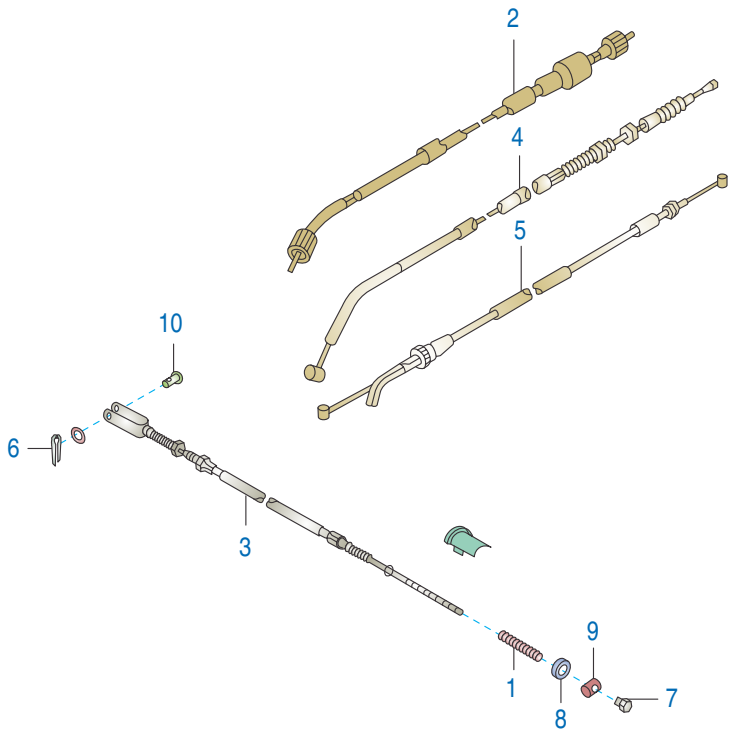

Plate No.: 44

Cables

No.	Part No.	Description	Cruise Qty.	Street Qty.	Remarks
1	30 1910 35	Spring, Brake Rod	1	1	
2	DK 2010 98	Cable- Speedometer	1	1	
3	JM 1910 13	Cable Brake	1	1	
4	PD 1612 03	Cable Clutch	1	–	
	DV 1910 02	Cable Clutch	–	1	
5	DV 1910 04	Cable Throttle	1	–	
	PD 1612 04	Cable Throttle	–	1	
6	39 0146 08	Pin Cotter	1	1	
7	30 1910 36	Nut Brake Rod	1	1	
8	39 1211 11	Washer	1	1	
9	DG 1910 50	Pin Brake Rod	1	1	
10	DG 1910 51	Pin	1	1	

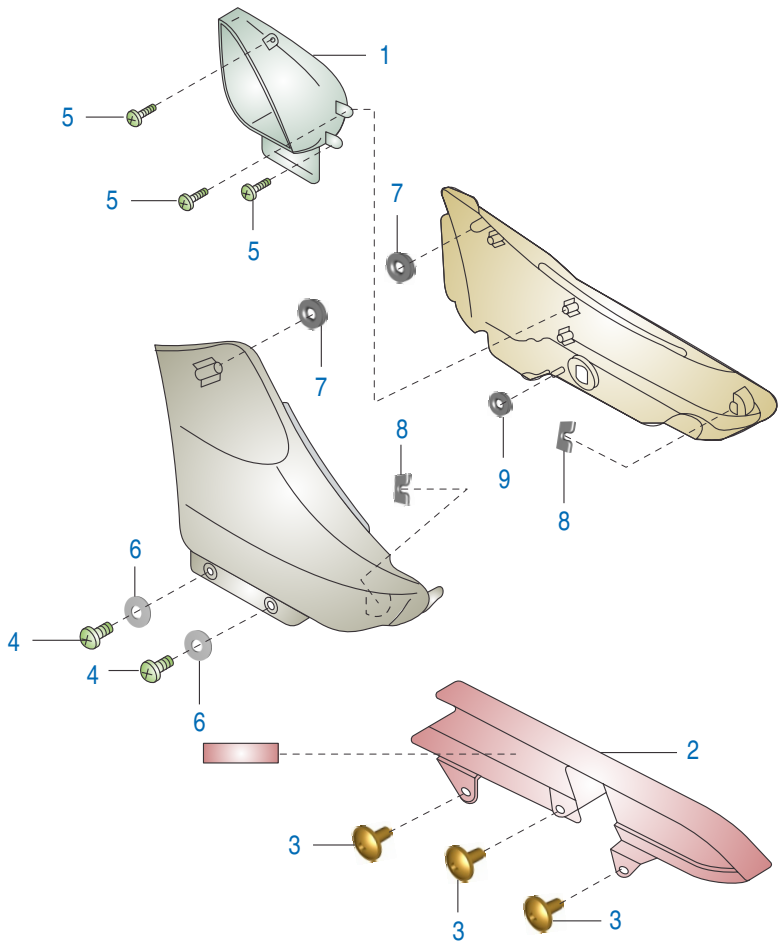

Plate No.: 45

Side Covers / Chain Cover

No.	Part No.	Description	Cruise Qty.	Street Qty.	Remarks
1	DG 1611 16	Cover Side RH Rear	1	1	
2	DG 1611 20	Case Chain	1	1	
3	DG 1611 21	Screw Tapping	3	3	
4	39 1076 01	Screw	2	2	
5	DG 1611 17	Screw	3	3	
6	31 1610 78	Washer	2	2	
7	DG 1611 18	Grommet	2	2	
8	DD 1610 22	Damper	2	2	
9	DG 1612 25	Damper	1	1	

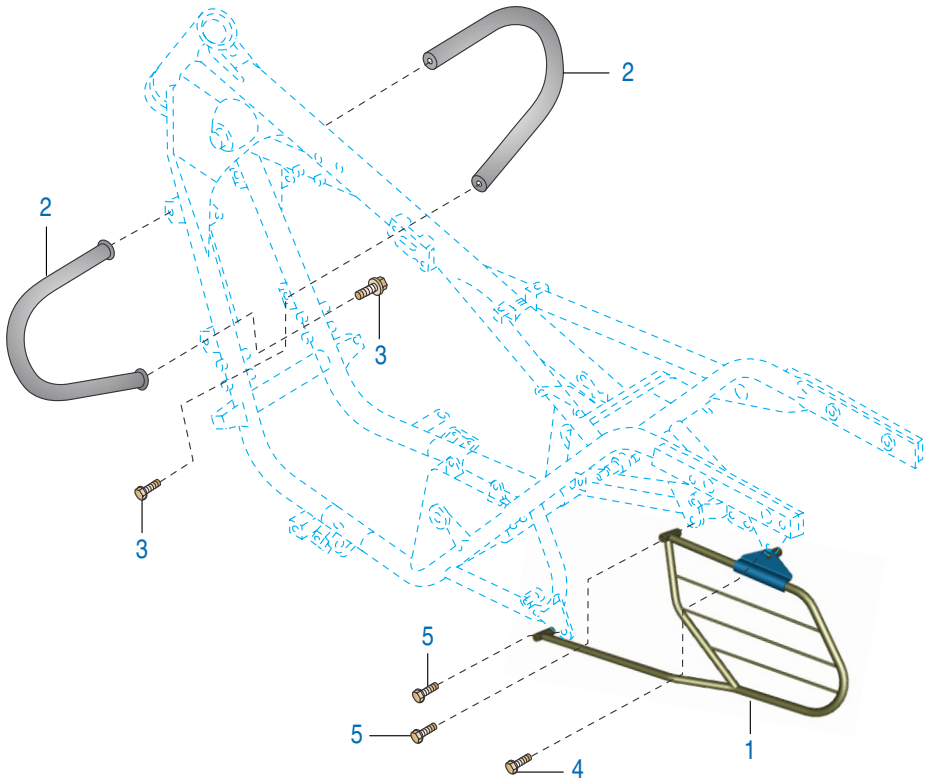

Plate No.: 46

Guards

No.	Part No.	Description	Cruise Qty.	Street Qty.	Remarks
1	PD 2312 01	Guard Sari	1	1	
2	JM 1610 17	Guard- Front Bumper	2	–	
	PD 2312 02	Guard- Front Bumper	–	2	
3	39 1940 04	Bolt Flanged	4	4	
4	KA DU08 40	Bolt Flanged	1	1	
5	KA DU08 55	Bolt Flanged M8	2	2	

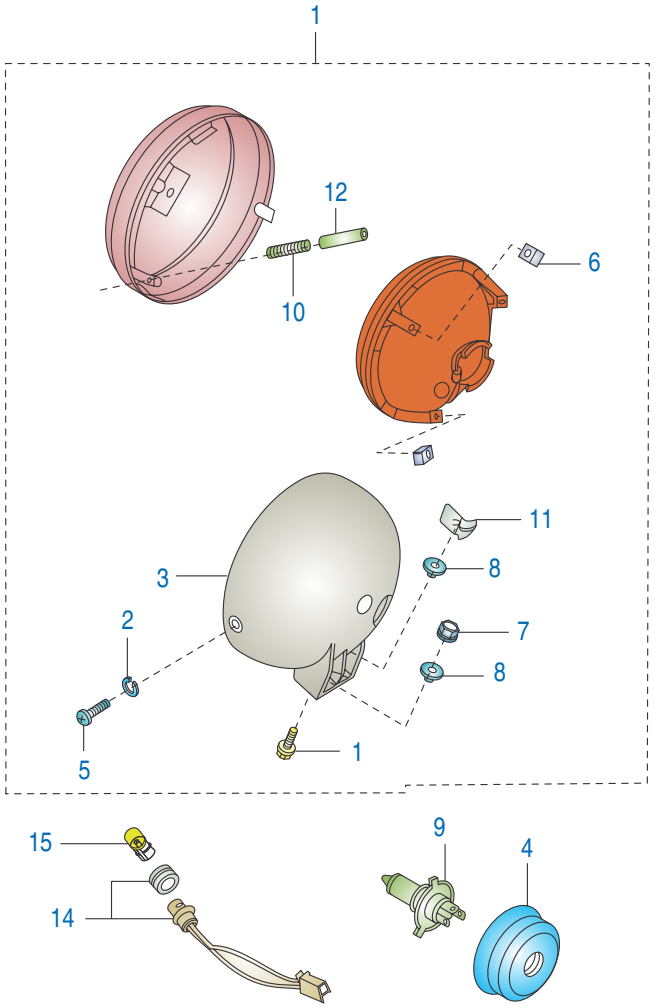

Plate No.: 47

Head Light

No.	Part No.	Description	Cruise Qty.	Street Qty.	Remarks
1	PD 4010 13	Head lamp Without Bulb	1	–	
	PD 4010 12	Head lamp Without Bulb	-	1	
2	39 0790 12	Spring Washer	2	2	
3	YP D010 05	Head Lamp Housing - Lumax	1	–	
	YP D030 01	Head Lamp Housing - Lumax	–	1	
4	YP D010 09	Cap for Head lamp-Lumax	1	1	
5	DG 2010 43	Screw	2	2	
6	DG 2010 70	Nut	1	1	
7	DG 1910 64	Nut Flanged	1	1	
8	DG 2010 57	Collar	2	2	For Head Light Mtg
9	PD 4010 14	Bulb H4 Blue Tinge- 55/60W	1	1	
10	DG 2010 72	Spring Focus Adjust	2	2	
11	DG 2010 12	Clamp Harness	1	1	
12	DG 2010 73	Tube	2	2	
13	39 2029 04	Bolt Flanged	2	2	N.I
14	YP D010 08	Harness Head Lamp-	1	1	
15	DG 2010 40	Lamp 12V - 4W	1	1	

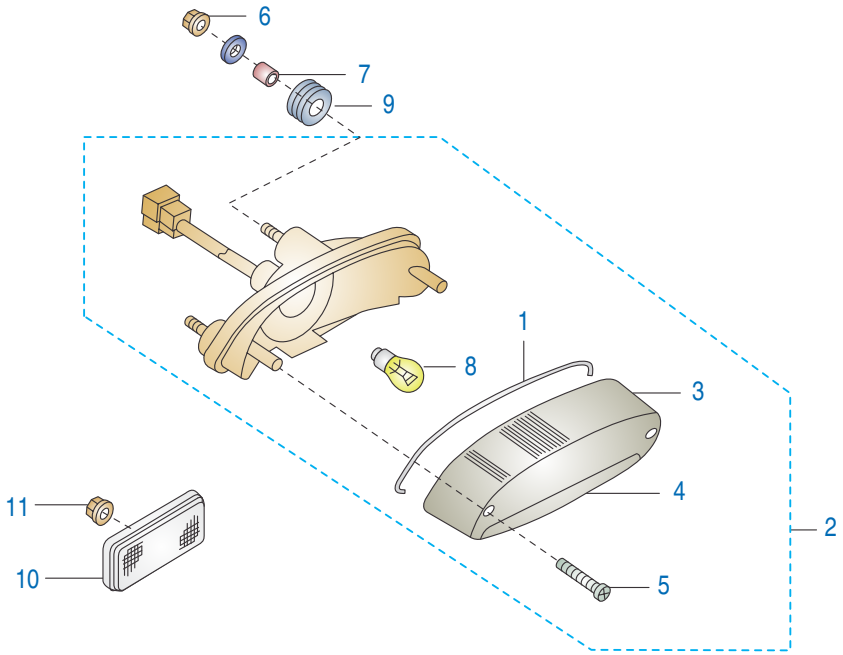

Plate No.: 48

Tail Light / Reflector Reflex

No.	Part No.	Description	Cruise Qty.	Street Qty.	Remarks
1	DG 2010 75	Gasket Tail Lamp Lens	1	1	
2	PD 4010 01	Tail Lamp Assly.	1	1	
3	DG 2010 49	Lens Tail Lamp- Red	1	1	
4	DG 2010 50	Lens Tail Lamp- Clear	1	1	
5	DG 2010 76	Screw Tapping	2	2	
6	KC GA06 06	Nut Flanged	3	3	
7	31 2010 01	Collar	3	3	
8	AA 2012 27	Lamp 12V - 21/5W	1	1	
9	DG 2010 15	Damper	3	3	
10	JG 4010 36	Reflector Reflex	1	1	
11	39 1972 15	Nut Flanged	1	1	

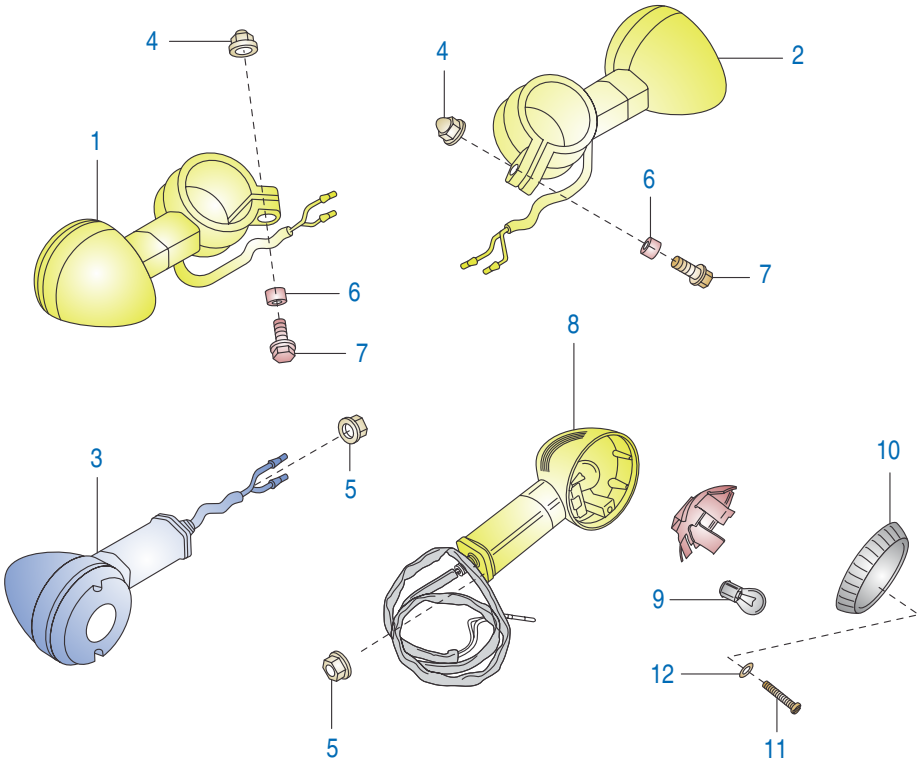

Plate No.: 49

Indicator Light

No.	Part No.	Description	Cruise Qty.	Street Qty.	Remarks
1	PD 4010 08	Indicator Assly FR. LH	1	–	
	PD 4010 04	Indicator Assly FR. LH	–	1	
2	PD 4010 09	Indicator Assly FR. RH	1	–	
	PD 4010 05	Indicator Assly FR. RH	–	1	
3	PD 4010 10	Indicator Assly Rear. LH	1	–	
	PD 4010 06	Indicator Assly Rear. LH	--	1	
4	39 0798 15	Nut Cap	2	2	
5	39 1225 15	Nut Flanged	2	2	
6	31 2010 01	Collar	2	2	
7	39 1950 04	Bolt Flanged Small	2	2	
8	PD 4010 11	Indicator Assly Rear RH	1	–	
	PD 4010 07	Indicator Assly Rear RH	–	1	
9	GH 2010 12	Lamp 12V-10W	4	4	
10	YP D010 10	Lens Signal Light	4	4	
11	DG 2010 77	Screw Signal Light	8	8	
12	DG 2010 78	Washer Signal Light Light	8	8	

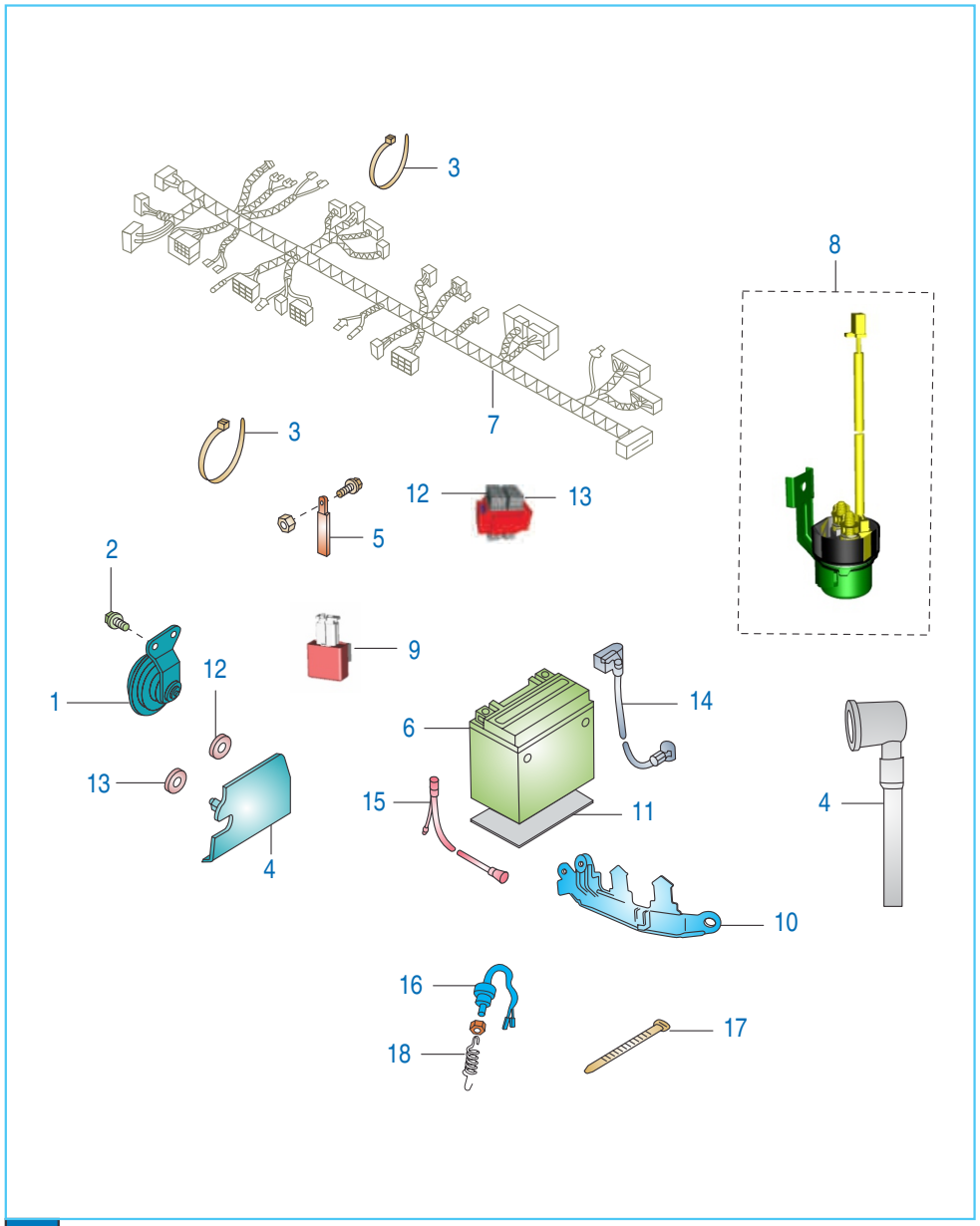

Plate No.: 50

Electrical Equipment

No.	Part No.	Description	Cruise Qty.	Street Qty.	Remarks
1	PD 4016 02	Horn	1	–	
	PD 4016 01	Horn	–	1	
2	39 1902 04	Bolt Flanged	2	2	
3	30 1910 48	Band	2	2	
4	JM 2010 32	Battery adapter with Drain Tube	1	1	
5	31 2010 21	Clamp wiring harness	1	1	
6	DJ 2011 26	Battery 12 V 9 Ah	1	1	
7	PD 4022 27	Wiring Harness	1	1	
8	DV 2010 16	Starter Relay Assly.	1	1	
9	DS 2010 25	Relay Turn Signal	1	1	
10	DV 1610 36	Band Battery Bracket	1	1	
11	DG 2010 27	Mat Battery	1	1	
12	AK 2010 12	Fuse 10A	2	2	
13	AP 2010 25	Fuse 15A	2	2	
14	JM 2010 12	Cable Assly. (Motor to St. Rly.)	1	1	
15	DV 2010 06	Cable Assly. (Battery to Earth)	1	1	
16	DG 2010 61	Rear Brake Switch	1	1	
17	JD 4022 17	Band (L 150)	2	2	
18	JM 1910 14	Spring Rear Brake Switch	1	1	

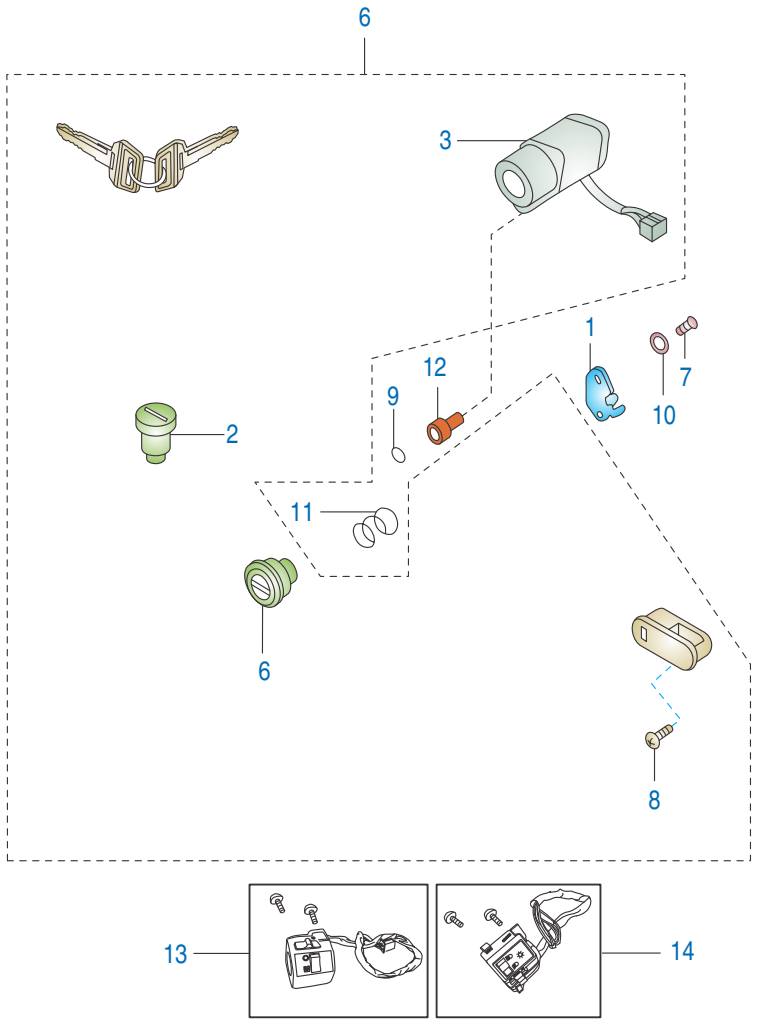

Plate No.: 51

Ignition Switch & Control Switch

No.	Part No.	Description	Cruise Qty.	Street Qty.	Remarks
1	DG 1810 55	Cap, Steering Lock	1	1	
2	DG 1410 17	Rotor, Lock, Tank Cap	1	1	
3	PD 4014 00	Switch Assly. Ignition	1	1	
4	DJ 2011 09	Front Brake Switch	1	1	N.I
5	DG 1611 68	Lock Assly Side Cover	1	1	
6	PD 2326 02	Lock Set (5 in 1)	1	1	
7	DG 1810 57	Screw	1	1	
8	DG 2210 10	Screw	1	1	
9	DG 2010 23	Plug	1	1	
10	DG 1810 58	Washer Wave	1	1	
11	DG 1810 59	Spring Steering Lock	1	1	
12	39 1975 04	Bolt Socket	1	1	
13	PD 4014 10	Control Switch LH	1	–	
	PD 4014 04	Control Switch LH	–	1	
14	PD 4014 11	Control Switch RH	1	–	
	PD 4014 01	Control Switch RH	--	1	
15	DG 2010 30	Clutch Switch	1	1	N.I

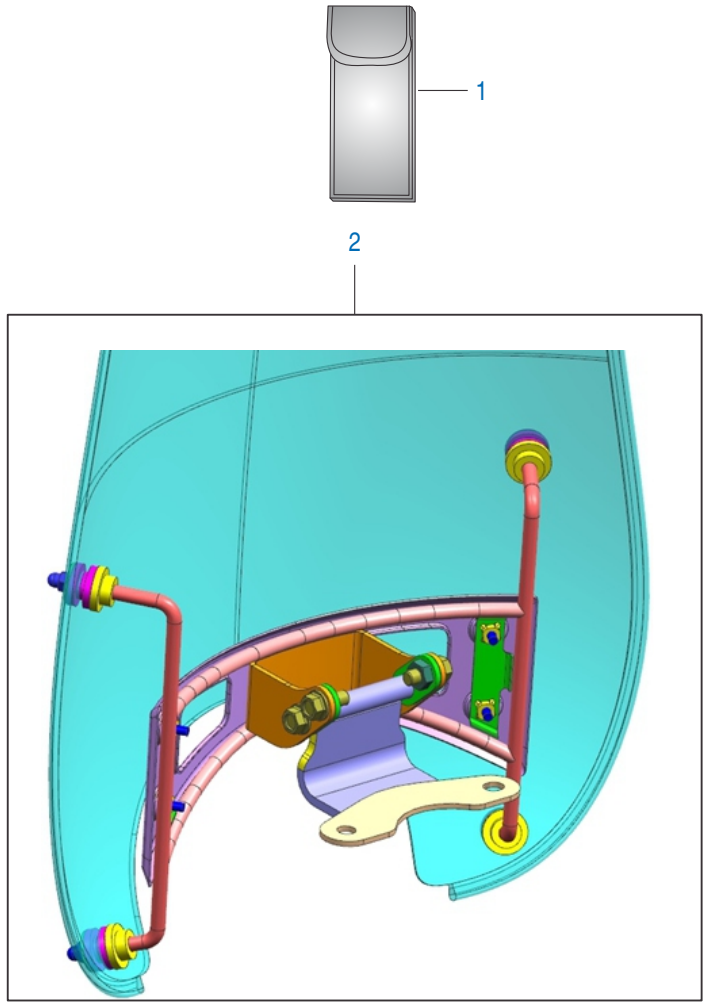

Plate No.: 52

Tool Kit

No.	Part No.	Description	Cruise Qty.	Street Qty.	Remarks
1	JM 2210 03	Tool Kit	1	1	
2	52 JM00 18	Wind Shield Kit	1	1	

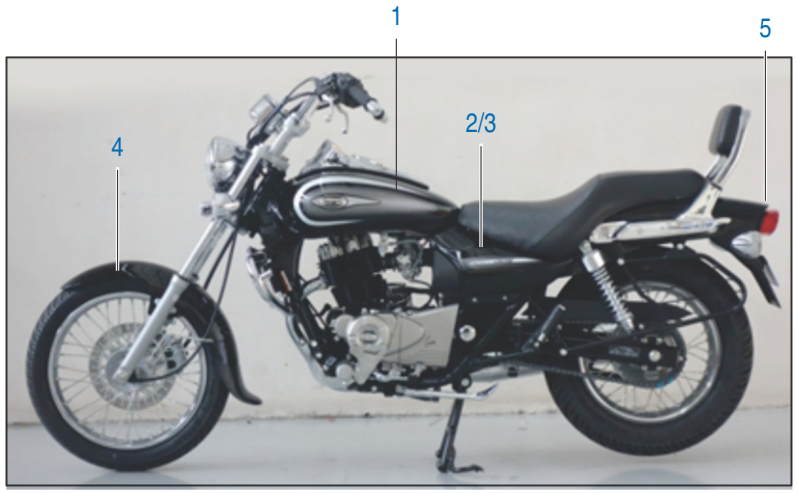

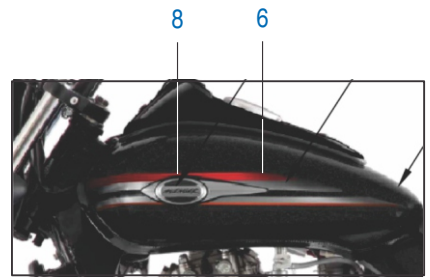

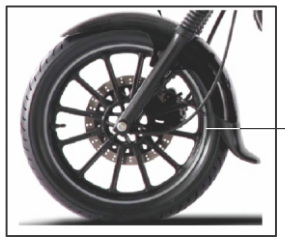

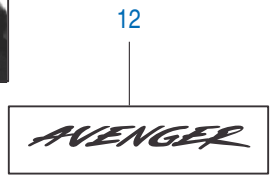

Plate No.: 53

Painted Parts and Decals

No.	Part No.	Description	Cruise Qty.	Street Qty.	Remarks
1	52 PD03 14	Tank fuel with decal	1	–	Ebony Black
	52 PD03 15	Tank fuel with decal	–	1	Matt Black
	52 PD03 43	Tank fuel with decal	–	1	Matt Olive Green
	52 PD03 16	Tank fuel with decal	1	–	Golden Beige
2	52 PD01 40	Cover side left with decal	1	--	Ebony Black
	52 PD01 61	Cover side left with decal	–	1	Matt Black
	52 PD03 29	Cover side left with decal	–	1	Matt Olive Green
	52 PD02 73	Cover side left with decal	1	–	Golden Beige
3	52 PD01 41	Cover side right with decal	1	--	Ebony Black
	52 PD01 62	Cover side right with decal	--	1	Matt Black
	52 PD03 30	Cover side Right with decal	–	1	Matt Olive Green
	52 PD02 74	Cover side Right with decal	1	–	Golden Beige
4	52 PD01 66	Fender assly. Front-Black	1	1	Matt Black
	52 PD02 66	Fender assly. Front	1	–	Golden Beige
5	56 JM06 X3	Fender rear	1	–	Ebony Black
	52 PD01 56	Fender rear	--	1	Matt Black
	56 PD06 P6	Fender rear	1	–	Golden Beige
6	36 PD00 24	Kit Tank Decal	1	--	Ebony Black
	36 PD00 58	Kit Tank Dcl	1	–	Golden Beige
	36 PD00 16	Kit Tank Decal	–	1	Matt Black
	36 PD00 64	Kit Tank Decal Matt	–	1	Matt Olive Green
7	36 PD00 27	Kit Side Cover Dcl	1	–	Ebony Black
	36 PD00 18	Kit Side Cover Dcl	–	1	Matt Black
	PD 2330 57	Side Cover Dcl LH	–	1	Matt Olive Green
	PD 2330 58	Side Cover Dcl RH	–	1	Matt Olive Green
	PD 2330 48	Side Cover Dcl LH	1	–	Golden Beige
	PD 2330 49	Side Cover Dcl RH	1	–	Golden Beige

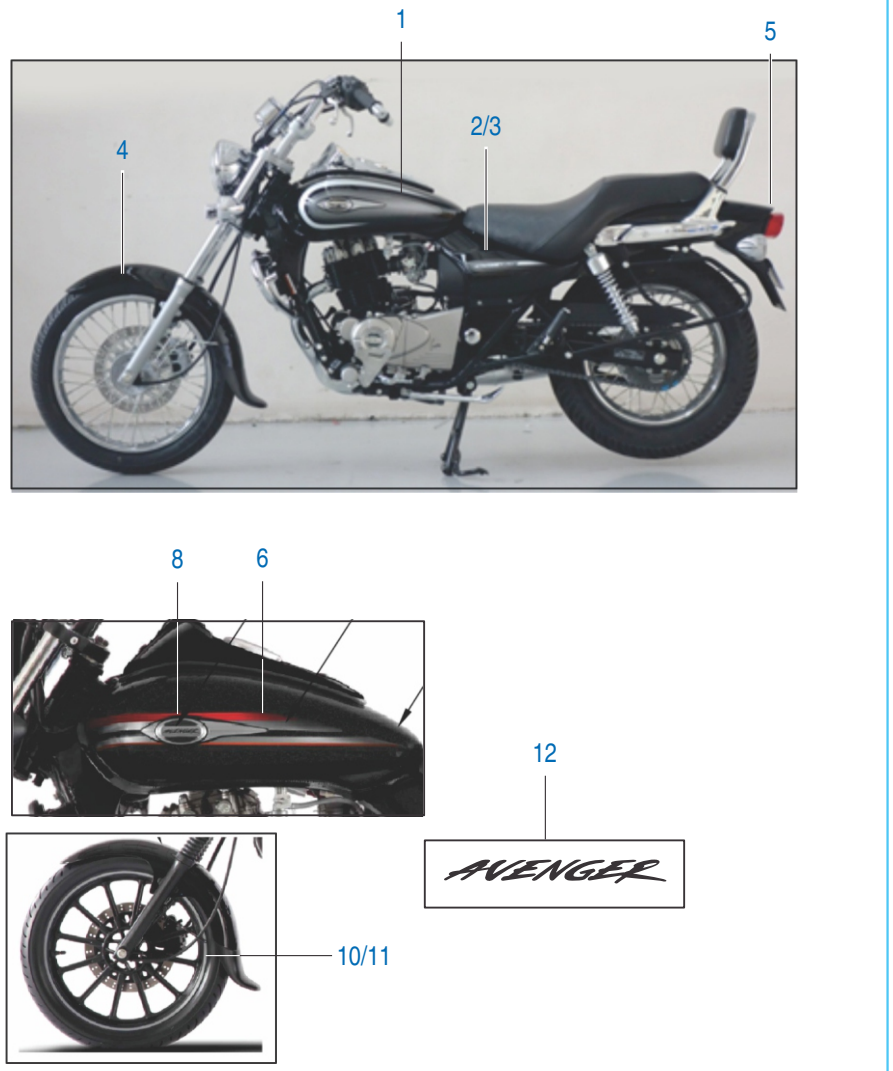

Plate No.: 53

Painted Parts and Decals

No.	Part No.	Description	Cruise Qty.	Street Qty.	Remarks
8	PD 2330 37	3D Decal Tank LH	1	–	
	PD 2330 02	3D Decal Tank LH	–	1	
	PD 2330 38	3D Decal Tank RH	1	–	
	PD 2330 03	3D Decal Tank RH	–	1	
9	PD 2330 20	Decal Front Fender Center	–	1	N.I.
9A	PD 2330 22	Decal Rear Fender Center	–	1	N.I
10	PD 2330 30	Decal Rim Front	–	1	
11	PD 2330 31	Decal Rim Rear	–	1	
12	PD 2330 01	Avenger Branding Holder Handle	1	1	

Sr No	Kit Part No.	Kit Description	Consisting of Following Parts		
			Part No.	Description	Qty/Kit
1	36PD0016	Tank DCL-BL Metallic-A101	Pd233024	Tank Decal RH (Matte Black Metallic)	1
			Pd233023	Tank Decal LH (Matte Black Metallic)	1
			Pd233028	Decal Tank Center (Matte Black Metallic)	1
2	36PD0018	S Cover DCL BL Metallic-A101	Pd233025	Side Cover Decal LH (Matte Black Metallic)	1
			Pd233026	Side Cover Decal RH (Matte Black Metallic)	1
3	52 DK02 03	Kit Assly Magneto Cover	Dk101767	COVER MAGNETO MOONLIGHT-SF	1
			Dg101418	GAUGE	1
			Je541212	DECAL MAGNETO COVER	1
4	36PD0020	Assly Cl Cover-A101	Pd541235	Clutch Cover	1
			Dk101738	Decal Cover RH	1
			39199020	Bearing - Needle	1
			39104119	Seal Oil	1
			31101060	Plug	2
5	36PD0021	Chain Sprocket-A101	Pd131200	Sprocket (36 T)	1
			Dt141005	Chain 110 Link	1
			Dv101048	Sprocket (14 T)	1
6	36PD0014	Assly C'case RH-A101	Pd541018	Crankcase RH (JC)	1
			59050002	Stud Bolt (M10)	1
			39258320	Bearing Ball6004-SKF	1
			59200027	Bearing NRB HK 1516 (15*21*16)	1
			39260120	Bearing Ball	1
			39215220	Needle Roller Bearing	1
7	36PD0013	Assly C'case LH-A101	Pd541017	Crankcase LH	1
			Cb101220	Plug	1
			59050002	Stud Bolt (M10)	1
			39260320	Ball Bearing	1
			59200006	BRG Ball 6204Z HN3 (20*47*14)	1
			39218520	Deep Groove Ball Bearing	1
			30101014	Seal-Oil	1
			39219019	Oil Seal	1
			Dh101203	Breather Pipe	1
8	36PD0024	Tank DCL E Black-A102	Pd233010	Tank Decal 1 LH (Ebony Black)	1
			Pd233011	Tank Decal 1 RH (Ebony Black)	1
			Pd233012	Tank Decal 2 LH (Ebony Black)	1
			Pd233013	Tank Decal 2 RH (Ebony Black)	1
9	36PD0027	S Cover DCL E Black-A102	Pd233014	Side Cover Decal LH (Ebony Black)	1
			Pd233015	Side Cover Decal RH (Ebony Black)	1

Sr No	Kit Part No.	Kit Description	Consisting of Following Parts		
			Part No.	Description	Qty/Kit
10	Pd511053	Cyl Head + Cover-102B	Pd511018	Cylinder Head	1
			Pd511101	Cover Cylinder Head	1
11	Dk101625	Block - Piston	Pd521002	CYL Block	1
			Dk101092	Assembly Piston	1
12	36DS1001	Cyl. Head O Ring Kit	39239121	O Ring (Cover Tappet)	2
			39128321	O ring	2
13	Dk101327	Valve Kit	Dk101052	Valve Intake	1
			Dk101011	Valve Exhaust	1
14	Dk101326	Valve Repair Kit	Dk101247	Retainer Valve Spring	2
			Dk101108	Spring Valve Inner	2
			Dk101110	Spring Valve Outer	2
			Dk101246	Seat Valve Spring	2
			Dk101011	Valve Exhaust	1
14	Dk101326	Valve Repair Kit	Dk101247	Retainer Valve Spring	2
			Dk101108	Spring Valve Inner	2
			Dk101110	Spring Valve Outer	2
			Dk101246	Seat Valve Spring	2
15	Dk101330	Guide Chain Kit	Dk101060	Guide Chain (Tight)	1
			Dk101059	Guide Chain (slack)	1
16	36DK0007	Kit Centrifugal Oil Filter	39220011	Washer	1
			Dh101234	Gasket Centrifugal Oil Filter	1
			39226701	Oval Screw	3
			Dh101066	Join Oil Deliver	1
			Dh101067	Spring Oil Deliver	1
			39219908	Pin Oil Deliver Joint	1
17	36DV0007	Steering Cone Kit	DG181045	Bearing Cone Upper	1
			DG181046	Bearing race Upper	1
			DG181047	Bearing race Lower	1
			DG181005	Bearing Cone Lower	1
18	DK101328	Ring Set Piston	DK101049	Top Ring	1
			Dk101050	Second Piston ring	1
			DK101051	Ring Piston	1
19	36DK0038	Set Primary Drive/Driven	DK101561	Clutch Housing	1
			DH101628	Gear Primary Drive	1
20	36DK0077	KIT for Starter Clutch	Dk101595		
			DK101596	Spring Starter Clutch	5

Sr No	Kit Part No.	Kit Description	Consisting of Following Parts		
			Part No.	Description	Qty/Kit
21	36DK0076	KIT Starter Clutch Assly	Dk101595		
			DK101595	Body Starter Clutch	1
			DK101596	Spring Starter Clutch	5
			39084914	Washer - Lock :- Toothed	3
22	36DV0005	Kit Holder Step FR. Serviceable	DG161146	Spring - L	1
			DG161147	Spring - R	1
			Dg161144	Bolt	2
			39198204	Bolt - Hexagon Socket Head :- M5	4
			39220404	Bolt - Hexagon Head With Flange :- M6	1
			39195404	Bolt - Flanged :- Small	1
			39150611	Washer - Plain	2
			39193717	Circlip	2
			DG161222	Bolt :- Pre-Coated	3
			DG161223	Bolt - Pre-Coated	1
23	36PD0030	Kit Friction Plate	DK101566	DISK A FRICTION CLUTCH	4
			PK551419	DISK C FRICTION CLUTCH	1
			DK101568	DISK B FRICTION CLUTCH	1
24	36PD0012	Kit Assly Clutch	Pd541228	CLUTCH COVER	1
			Dk101738	DECAL COVER Rh	1
			39199020	BEARING - NEEDLE	1
			39104119	SEAL OIL	1
			31101060	PLUG	2
25	52DH0169	OIL PUMP ASSEMBLY	DH121001	PUMP ASSEMBLY - OIL	1
			Dh121010	MESH - FILTER :- OIL PUMP	1
			39219421	RING - O	1
			DH121035	CLIP MESH OIL FILTER	1

Sr No	Kit Part No.	Kit Description	Consisting of Following Parts		
			Part No.	Description	Qty/Kit

Amendment Sheet

AVENGER 220 CRUISE | AVENGER 220 STREET BS IV

Page no.	Fig. no.	Old part no.	New part no.	Description	Updation date	Remarks

Amendment Sheet

AVENGER 220 CRUISE | AVENGER 220 STREET BS IV

Page no.	Fig. no.	Old part no.	New part no.	Description	Updation date	Remarks

Part Number	Figure	Page
16151066	11	62
30101014	10	26
30101236	6	48
30141031	9	84
30141031	21	86
30141032	22	86
30141039	10	84
30151005	7	66
30151005	7	68
30151069	16	66
30151069	15	68
30151076	8	66
30151076	8	68
30151082	12	66
30151082	12	68
30171022	10	56
30181026	16A	80
30191017	16	76
30191024	15	76
30191035	1	94
30191036	7	94
30191048	3	106
31101108	14	22
31101173	4	14
31121006	9	12
31161078	6	96
31201001	7	102
31201001	6	104
31201021	5	106
33141008	2	4
39014608	14	56
39014608	11	70
39014608	6	94
39029215	3	70

Part Number	Figure	Page
39069415	18	70
39071111	20	44
39075201	6	26
39076101	19	84
39078912	19	70
39078912	27	78
39079012	2	100
39079708	7	60
39079815	4	104
39080511	5	70
39080708	21	70
39084914	18	46
39096315	17	80
39097204	10	46
39099906	10	28
39099906	4	30
39104119	3	28
39105315	7	52
39106901	20	68
39107504	9	2
39107601	4	96
39119704	6	20
39121111	10	70
39121111	8	94
39122411	12	52
39122515	6	40
39122515	22	70
39122515	5	104
39150711	9	36
39154011	20	70
39162011	9	16
39166005	1	6
39167304	13	10
39167404	7	6

Parts Index
AVENGER 220 CRUISE | AVENGER 220 STREET BS IV

Part Number	Figure	Page
39167404	11	16
39167404	22	28
39167404	2	34
39167704	17	26
39167704	3	30
39168606	8	16
39168606	4	34
39182912	7	54
39188020	3	10
39190204	17	84
39190204	2	106
39191304	18	84
39191604	21	66
39193120	6	14
39194004	3	98
39194204	3	90
39194304	5	58
39194304	12	80
39194304	4	90
39194404	25	78
39194404	3	92
39195004	13	44
39195004	7	104
39195404	6	56
39195604	17	56
39195604	15	80
39195604	17	90
39196704	5	50
39196704	10	50
39197015	3	50
39197215	11	102
39197504	12	108
39199020	18	28
39199715	11	52

Part Number	Figure	Page
39199819	13	22
39201719	5	8

Part Number	Figure	Page
36DV0007	4	48
36PD0012	1	28
36PD0013	1	26
36PD0014	2	24
36PD0016	6	112
36PD0018	7	112
36PD0020	1	28
36PD0021	10	66
36PD0021	10	68
36PD0024	6	112
36PD0027	7	112
36PD0030	6	32
36PD0031	9	38
36PD0032	2	38
36PD0035	2	72
36PD0036	4	72
36PD0037	1	72
36PD0038	17	72
36PD0041	3	72
36PD0044	12	74
36PD0045	13	74
36PD0058	6	112
36PD0059	3	66
36PD0059	3	68
36PD0061	1	2
36PD0064	6	112
52DH0169	1	34
52DH0177	10	16
52DK0203	1	30
52DV0051	16	22
52DV0052	4	22
52JM0018	2	110
52PD0087	2	84
52PD0090	5	30

Part Number	Figure	Page
52PD0109	5	30
52PD0117	2	84
52PD0140	2	112
52PD0141	3	112
52PD0156	5	112
52PD0161	2	112
52PD0162	3	112
52PD0166	4	112
52PD0266	4	112
52PD0273	2	112
52PD0274	3	112
52PD0314	1	112
52PD0315	1	112
52PD0316	1	112
52PD0329	2	112
52PD0330	3	112
52PD0343	1	112
56JM06X3	5	112
56PD06P6	5	112
AA101437	13	18
AA101437	4	24
AA141067	4	4
AA201227	8	102
AK201012	12	106
AP101043	7	30
AP111012	12	44
AP201025	13	106
CS101128	14	10
DD101062	4	10
DD111012	15	44
DD121007	8	12
DD161022	8	96
DD161071	4	60
DE151015	16	72

Parts Index
AVENGER 220 CRUISE | AVENGER 220 STREET BS IV

Part Number	Figure	Page
DE151037	7	74
DE151043	8	74
DE151045	9	74
DE151046	5	74
DE151047	6	74
DE151048	4	74
DE191010	5	72
DE191027	13	72
DE191028	12	72
DE191029	11	72
DE191030	10	72
DE191031	8	72
DE191032	9	72
DE191033	6	72
DE191034	7	72
DE191035	15	72
DF141128	12	84
DG101029	4	8
DG101187	6	22
DG101285	4	40
DG101339	5	22
DG101417	3	40
DG101418	7	28
DG101419	8	40
DG101498	11	2
DG101498	14	26
DG121010	6	42
DG121012	7	42
DG121040	16	88
DG141017	2	108
DG141019	13	84
DG141020	1	84
DG141024	11	84
DG141026	14	84

Part Number	Figure	Page
DG141027	16	84
DG141028	8	84

Part Number	Figure	Page
DG171037	3	54
DG171038	8	54
DG181003	18	80
DG181004	23	82
DG181005	20	82
DG181006	28	82
DG181008	29	82
DG181009	26	82
DG181010	5	80
DG181011	13	80
DG181012	3	80
DG181013	14	80
DG181014	6	80
DG181015	7	80
DG181021	24	82
DG181022	11	80
DG181023	21	82
DG181024	19	80
DG181026	22	82
DG181034	2	80
DG181040	34	82
DG181054	24	78
DG181055	1	108
DG181057	7	108
DG181058	10	108
DG181059	11	108
DG181067	6	76
DG181070	7	76
DG181071	8	76
DG181087	23	78
DG181088	25	82
DG181089	4	80
DG181091	4	76
DG181091	10	80

Part Number	Figure	Page
DG191010	10	76
DG191012	12	76
DG191013	14	76
DG191014	17	76
DG191048	23	70
DG191050	9	94
DG191051	9	70
DG191051	10	94
DG191064	7	100
DG201012	32	82
DG201012	11	100
DG201015	9	102
DG201023	9	108
DG201027	11	106
DG201030	19	78
DG201030	15	108
DG201040	15	100
DG201043	5	100
DG201049	3	102
DG201050	4	102
DG201057	8	100
DG201061	16	106
DG201070	6	100
DG201072	10	100
DG201073	12	100
DG201075	1	102
DG201076	5	102
DG201077	11	104
DG201078	12	104
DG221010	8	108
DG221027	14	90
DG221038	11	40
DG221041	18	90
DH101018	11	28

Parts Index
AVENGER 220 CRUISE | AVENGER 220 STREET BS IV

Part Number	Figure	Page
DH101048	8	10
DH101064	10	14
DH101065	12	14
DH101072	2	16
DH101079	4	18
DH101084	8	18
DH101111	15	18
DH101141	4	28
DH101142	5	28
DH101146	3	20
DH101152	23	28
DH101154	12	28
DH101163	16	46
DH101172	7	46
DH101195	11	14
DH101197	2	28
DH101199	5	44
DH101203	12	26
DH101235	5	18
DH101272	10	2
DH101275	20	28
DH101292	9	30
DH101293	10	30
DH101294	11	30
DH101295	8	8
DH101319	18	18
DH101380	6	44
DH101381	4	44
DH101385	3	16
DH101385	23	26
DH101385	5	46
DH101388	14	30
DH101390	18	26
DH101392	11	10

Part Number	Figure	Page
DH101393	7	22
DH101393	17	22

Part Number	Figure	Page
DK101380	15	26
DK101386	9	10
DK101416	1	16
DK101471	1	18
DK101480	13	28
DK101565	7	32
DK101569	5	32
DK101570	15	32
DK101571	2	32
DK101573	12	32
DK101574	9	32
DK101592	7	12
DK101605	2	46
DK101614	2	10
DK101625	6	12
DK101625	4	16
DK101632	7	18
DK101636	21	28
DK101717	16	18
DK101718	14	18
DK101719	19	18
DK101720	17	18
DK101725	8	22
DK101732	5	20
DK101738	19	28
DK101748	1	8
DK101751	2	8
DK101755	3	8
DK101770	25	28
DK101770	13	46
DK111028	7	44
DK141041	25	86
DK161081	8	36
DK181075	5	48

Part Number	Figure	Page
DK201098	2	94
DP121018	9	42
DP161144	31	82
DP161145	4	58
DS101071	24	28
DS101084	7	2
DS101096	5	2
DS101154	5	14
DS101166	4	2
DS101215	8	28
DS101353	9	28
DS101353	12	46
DS201025	9	106
DV101034	15	22
DV101042	2	30
DV101044	3	22
DV101045	9	22
DV101048	7	14
DV101048	22	18
DV151005	14	66
DV151006	11	66
DV151006	11	68
DV151007	5	64
DV161017	1	60
DV161033	5	60
DV161036	10	106
DV161046	1	56
DV161060	9	60
DV171001	1	54
DV181008	3	76
DV181008	2	92
DV181015	8	80
DV191002	4	94
DV191004	5	94

Parts Index
AVENGER 220 CRUISE | AVENGER 220 STREET BS IV

Part Number	Figure	Page
DV191007	3	72
DV201006	20	26
DV201006	15	106
DV201016	8	106
DZ161265	8	58
GH201012	9	104
JC101034	12	10
JC101085	11	32
JC101114	3	46
JC101115	8	46
JC111007	11	46
JC111026	2	44
JC111028	1	44
JC151020	3	64
JD402217	17	106
JE541212	8	30
JE581039	13	4
JE581416	8	4
JG171029	13	88
JG171086	12	88
JG401036	10	102
JH171025	6	88
JH171048	10	88
JK511002	11	42
JL122026	3	52
JL581065	12	4
JL581066	3	4
JM100040	12	30
JM100041	13	30
JM101022	12	40
JM101027	2	40
JM151005	6	66
JM151005	6	68
JM161002	4	50

Part Number	Figure	Page
JM161003	2	50
JM161017	2	98

Part Number	Figure	Page
PD121010	4	80
PD121011	26	82
PD121012	25	82
PD121014	36	82
PD121015	9	80
PD121016	9	80
PD121017	1	80
PD122000	1	52
PD122003	16	70
PD122004	17	70
PD122005	1	54
PD131007	3	62
PD131201	9	66
PD131212	1	68
PD131218	4	62
PD131803	3	74
PD131808	2	72
PD131813	2	74
PD131816	16	72
PD131817	2	68
PD151000	1	76
PD151001	6	76
PD151003	4	76
PD151003	10	80
PD151004	7	76
PD151005	8	76
PD151006	2	48
PD151007	1	76
PD151009	2	76
PD161001	10	76
PD161004	9	76
PD161005	10	76
PD161203	4	94
PD161204	5	94

Part Number	Figure	Page
PD171003	7	84
PD171603	2	88
PD171604	3	88
PD171605	4	88
PD171606	5	88
PD171607	4	84
PD171609	8	88
PD171611	7	88
PD171612	4	84
PD171616	9	88
PD181204	7	90
PD181205	11	90
PD181212	7	90
PD181213	11	90
PD181214	10	90
PD181215	8	90
PD181216	8	80
PD181401	9	58
PD191000	1	90
PD191001	2	90
PD191002	1	90
PD231201	1	98
PD231202	2	98
PD231204	11A	40
PD231205	15	56
PD231205	12	70
PD231206	3	56
PD231400	9	90
PD231401	9A	90
PD231402	12	90
PD231403	13	90
PD231404	20	90
PD231407	6	90
PD231408	10	90

Parts Index
AVENGER 220 CRUISE | AVENGER 220 STREET BS IV

Part Number	Figure	Page
PD231409	8	90
PD231410	5	90
PD231411	19	90
PD231412	21	90
PD231602	28	78
PD231603	29	78
PD231604	28	78
PD231605	29	78
PD232602	6	108
PD233001	12	114
PD233002	8	114
PD233003	8	114
PD233020	9	114
PD233022	9A	114
PD233030	10	114
PD233031	11	114
PD233037	8	114
PD233038	8	114
PD233048	7	112
PD233049	7	112
PD233057	7	112
PD233058	7	112
PD351213	8	44
PD351235	10	44
PD351237	16	44
PD401001	2	102
PD401004	1	104
PD401005	2	104
PD401006	3	104
PD401007	8	104
PD401008	1	104
PD401009	2	104
PD401010	3	104
PD401011	8	104

Part Number	Figure	Page
PD401012	1	100
PD401013	1	100

Part Number	Figure	Page
YPD01011	1	40
YPD03001	3	100
YPD03002	1	40

Part Number	Figure	Page

Parts Index
AVENGER 220 CRUISE | AVENGER 220 STREET BS IV

Part Number	Figure	Page

Part Number	Figure	Page

Part Number	Figure	Page

Part Number	Figure	Page

Parts Index
AVENGER 220 CRUISE | AVENGER 220 STREET BS IV

Part Number	Figure	Page

Part Number	Figure	Page

Part Number	Figure	Page

Part Number	Figure	Page

Parts Index
AVENGER 220 CRUISE | AVENGER 220 STREET BS IV

Part Number	Figure	Page

Part Number	Figure	Page